RESOLUTION NO. 2021-106

A RESOLUTION OF THE ALBANY CITY COUNCIL DETERMINING THAT PA21-002, DESIGN REVIEW AND A DENSITY BONUS APPLICATION REQEUST FOR A NEW 207-UNIT MIXED USE APARTMENT PROJECT AT 540 SAN PABLO AVENUE IS CATEGORICALLY EXEMPT FROM CALIFORNIA ENVIRONMENTAL QUALITY ACT (CEQA) REVIEW PURSUANT TO SECTION 15332 "IN-FILL DEVELOPMENT PROJECTS" OF THE CEQA GUIDELINES

WHEREAS, On December 6, 2004, the City Council of the City of Albany adopted Ordinance #04-09 establishing Chapter XX "Planning and Zoning" of the Albany Municipal Code; and

WHEREAS, Chapter XX established development standards and review procedures for new residential construction; and

WHEREAS, the Albany City Council approved Resolution No. 2016-24 adopting the Albany 2035 General Plan on April 18, 2016;

WHEREAS, on January 25, 2021, Trachtenberg Architects, serving as the architect for the project, submitted pre-application plans for Planning & Zoning Commission preliminary review for a new 207 unit mixed use apartment building at 540 San Pablo Avenue; and

WHEREAS, on January 25, 2021, Trachtenberg Architects submitted an SB 330 application for the proposed project; and

WHEREAS, on March 23, 2021 the Planning & Zoning Commission held a study session on the pre-application plans and provided feedback to the applicant; and

WHEREAS, the formal design review application for an apartment development at 540 San Pablo Avenue (the "project") was filed by the applicant on June 11, 2021; and

WHEREAS, the application is for a mixed use residential apartment use in the San Pablo Commercial (SPC) Zoning District; and

WHEREAS, Section 20.40.040 of the Albany Municipal Code identifies procedures for processing applications pursuant to Government Code Section 65915, State Density Bonus Law; and

WHEREAS, the applicant seeks modification to development standards pursuant to State Density Bonus Law in exchange for the provision of affordable units; and

WHEREAS, the City of Albany retained the services of Rincon Consultants to prepare supporting analysis consistent with Section 15332, "In-Fill Development" of the CEQA Guidelines, which exempts in-fill development; and

WHEREAS, the project is categorically exempt from the California Environmental Quality Act ("CEQA"), Public Resources Code section 21000 et seq. pursuant to Section 15332, "In-Fill Development" of the CEQA Guidelines, which exempts in-fill development, and as determined in the CEQA exemption analysis:

a) The project is consistent with the applicable general plan designation and all applicable general plan policies as well as with applicable zoning designation and regulations;
b) The proposed development occurs within city limits on a project site of no more than five acres substantially surrounded by urban uses;
c) The project site has no value, as habitat for endangered, rare or threatened species;
d) Approval of the project would not result in any significant effects relating to traffic, noise, air quality, or water quality;

e) The site can be adequately served by all required utilities and public services; and

f) no unusual circumstances about the property are known that would have a significant effect on the environment; and

WHEREAS, a public hearing notice was mailed to property owners within 300 ft. of the subject site and was posted in three public places on September 17, 2021 for the Planning & Zoning Commission hearing pursuant to Government Code Section 65090; and

WHEREAS, on September 29, 2021 the Planning & Zoning Commission held a public hearing, considered all public comments received, the presentation by City staff, the staff report, and all other pertinent documents regarding the proposed request; and

WHEREAS, on September 29, 2021 the Planning & Zoning Commission adopted Resolution 2021-02 by a 5-0 vote forwarding a recommendation to City Council to determine that the project is Categorially Exempt from the California Environmental Quality Guidelines (CEQA) pursuant to Section 15332, "In-Fill Development" of the CEQA Guidelines; and

WHEREAS, a public hearing notice was mailed to property owners within 300 ft. of the subject site and was posted in three public places on October 7, 2021 for the City Council hearing pursuant to Government Code Section 65090; and

WHEREAS, on October 18, 2021 the Albany City Council held a public hearing, considered all public comments received, the presentation by City staff, the staff report, and all other pertinent documents regarding the proposed request; and

NOW, THEREFORE, THE CITY OF ALBANY CITY COUNCIL DOES HEREBY RESOLVE AS FOLLOWS:

a) The project is consistent with the applicable general plan designation and all applicable general plan policies as well as with applicable zoning designation and regulations;

Finding: The proposed project is consistent with the General Plan land use designation of San Pablo Mixed Use (SPMX) and the Zoning Designation of San Pablo Commercial (SPC).

b) The proposed development occurs within city limits on a project site of no more than five acres substantially surrounded by urban uses;

Finding: The subject site is 2.18 acres and is surrounded by developed property and urban uses.

c) The project site has no value, as habitat for endangered, rare or threatened species;

Finding: The existing subject site is developed with 37,700 sq. ft. of commercial space and a surface parking lot. There are no known habitats or endangered species on the subject site.

d) Approval of the project would not result in any significant effects relating to traffic, noise, air quality, or water quality;

Finding: The subject site is located .4 miles from the El Cerrito Plaza BART Station. Pursuant to CEQA Guidelines section 15064.3(b)(1), the project is presumed to cause a less than significant transportation impact. Supporting analysis has been prepared for noise and air/water quality.

e) The site can be adequately served by all required utilities and public services;

Finding: The subject site is currently served existing utility services including PG&E, EBMUD, Waste Management and will continue to be served by these utility/service providers.

f) No unusual circumstances about the property are known that would have a significant effect on the environment;

Finding: There are no unique circumstances present on the property that would result in a significant impact.

NOW THEREFORE BE IT RESOLVED by the City Council of the City of Albany hereby determines that the project is Categorically Exempt from CEQA pursuant to Section 15332 "In-Fill Development Projects" subject to Exhibit A "Supporting Documents."

_____

GE'NELL GARY, MBA – MAYOR

Exhibit A – CEQA Class 32 Categorical Exemption Report

540 San Pablo Avenue Mixed Use Project

CEQA Class 32 Categorical Exemption Report

prepared by

City of Albany
1000 San Pablo Avenue
Albany, California 94706
Contact: Anne L. Hersch, AICP, Planning Manager

prepared with the assistance of

Rincon Consultants, Inc.
449 15th Street, Suite 303
Oakland, California 94612

September 2021

RINCON CONSULTANTS, INC.
Environmental Scientists | Planners | Engineers
rinconconsultants.com

540 San Pablo Avenue Mixed Use Project

CEQA Class 32 Categorical Exemption Report

prepared by

City of Albany
1000 San Pablo Avenue
Albany, California 94706
Contact: Anne L. Hersch, AICP, Planning Manager

prepared with the assistance of

Rincon Consultants, Inc.
449 15th Street, Suite 303
Oakland, California 94612

September 2021

RINCON CONSULTANTS, INC.
Environmental Scientists | Planners | Engineers
rinconconsultants.com

This report prepared on 50% recycled paper with 50% post-consumer content.

Table of Contents

Tables

Figures

Appendices

1 Introduction

This report serves as the technical documentation of an environmental analysis performed by Rincon Consultants, Inc. for the 540 San Pablo Avenue Mixed-Use Project in the City of Albany. The intent of the analysis is to document whether the project is eligible for a Categorical Exemption (CE) pursuant to Section 15332 (Class 32, "In-Fill Development Projects") of the California Environmental Quality Act (CEQA) *Guidelines*. The report provides an introduction, project description, and evaluation of the project's consistency with the requirements for a Class 32 exemption. This includes an analysis of the project's potential impacts in the areas of biological resources, traffic, air quality, noise, water quality, and historic resources. The report concludes that the project is eligible for a Class 32 CE.

Section 15332 of the *CEQA Guidelines* states that a CE is allowed when:

a. The project is consistent with the applicable general plan designation and all applicable general plan policies as well as with applicable zoning designation and regulations.
b. The proposed development occurs within city limits on a project site of no more than five acres substantially surrounded by urban uses.
c. The project site has no value as habitat for endangered, rare, or threatened species.
d. Approval of the project would not result in any significant effects relating to traffic, noise, air quality, or water quality.
e. The site can be adequately served by all required utilities and public services.

Additionally, *CEQA Guidelines* Section 15300.2 contains a number of "exceptions" to categorical exemptions, including a provision that a categorical exemption "shall not be used for a project which may cause a substantial adverse change in the significance of a historical resource."

Rincon Consultants, Inc. evaluated the project's consistency with the above requirements, including its potential impacts in the areas of biological resources, traffic, noise, air quality, water quality, and the exceptions to categorical exemptions, to confirm the project's eligibility for the Class 32 exemption.

2 Project Description

2.1 Project Location and Setting

The project site encompasses approximately 2.18 acres located at 540 San Pablo Avenue in the City of Albany, Alameda County. The site is on the west side of San Pablo Avenue (State Route 123) just north of its intersection with Clay Street. The roughly rectangular-shaped site comprises nine parcels (Assessor's Parcel Numbers: 66-2797-2-3, 66-2797-4, 66-2797-5, 66-2797-6, 66-2797-7-2, 66-2797-9-2, 66-2797-23, 66-2797-24, 66-2797-25) and has frontage on San Pablo Avenue, Clay Street and Adams Street. The site is zoned San Pablo Commercial (SPC) and is within a Planned Residential/Commercial Overlay District (PCR). Figure 1 shows the regional location of the project site, and Figure 2 shows the outline of the project site in its neighborhood context.

The project site is bordered by San Pablo Avenue and commercial uses to the east and retail and commercial uses to the north and south. Residential uses are located to the west along Adams Street. The site is located in a transit priority area based on the Governor's Office of Planning and Research (OPR) guidelines, as the El Cerrito Plaza Bay Area Rapid Transit (BART) station is within 0.5 miles northeast of the site.

The project site is currently developed with three one-story commercial buildings including the former Albany Bowl bowling alley, a Metro PCS store, and A&M Residential and Commercial Glass Repair store, as well as surface parking. Landscaping is generally limited to a landscaped strip on part of the building frontage along San Pablo Avenue, parking lot trees in the surface parking lot in the northern portion of the site, and trees along the western property line. The site is generally level, rising gradually from east to west and north to south.

2.2 Project Characteristics

The proposed project would involve demolition of the existing buildings and pavement and construction of two new mixed-use buildings and nine townhouses. Building A would be six stories above ground, 69 feet in height and would consist of 121 dwelling units, one approximately 1,725 square foot commercial space, a fitness area, and a family center. Building B would be six stories above ground, 71 feet in height, and would consist of 77 dwelling units, one approximately 1,425 square foot commercial space on the southwest corner of the site and one approximately 2,350 square foot commercial space on the southeast corner of the site. The project would also involve the construction of nine 3-bedroom townhouses to the north of Building B with frontage on Adams Street. The first level, Level 1, of each townhome would have a floor area of 748 square feet (318 plus 430 square foot garage); Levels 2 and 3 would each have a floor area of 748 square feet. Twenty-one of the multi-family units from Buildings A and B would be designated as affordable housing, thus making the project eligible for a density bonus. The applicant has requested density bonus waivers for allowable gross floor area, solar plane, and maximum height (increase from four to six stories and heights up to 71 feet), and density bonus concessions to reduce the amount of required open space and to eliminate certain application requirements. The project applicant also requested a reduction in open space requirements as a density bonus concession. The project would have a total of 181 parking spaces: 139 spaces to serve Buildings A and B on the ground levels of those buildings, 18 spaces in individual garages to serve the townhomes, and 24 surface spaces to serve the proposed commercial uses. The project would also include a total of 268 bicycle parking

Figure 1 Regional Project Location

Imagery provided by Esri and its licensors © 2021.

Project Location

N

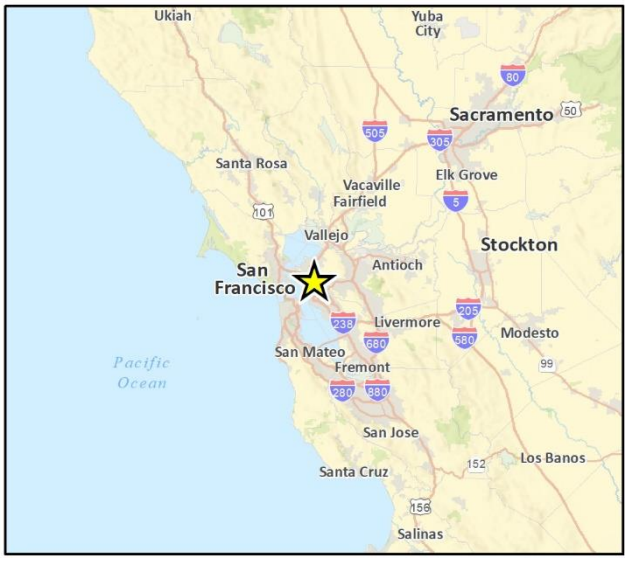

Figure 2 Project Site

Imagery provided by Microsoft Bing and its licensors © 2021.

Fig 2 Project Location

spaces, of which 256 would be secured indoors and the remaining 12 would be located on sidewalk-mounted bicycle racks.

Table 1 summarizes the characteristics of the project and Figure 3 shows the proposed site plan. Full project plans with building elevations are included as Appendix A.

Table 1 Project Characteristics

Descriptions	Building A	Building B	Townhomes
Address	540 San Pablo Avenue		
Assessor's Parcel Number (APN)	66-2797-2-3, 66-2797-4, 66-2797-5, 66-2797-6, 66-2797-7-2, 66-2797-9-2, 66-2797-23, 66-2797-24, 66-2797-25		
Building Footprint	151,983 sf	108,272 sf	2,244
Floor Area	**Level 1:** 33,095 sf (11,027 sf for unit interior and commercial space + 22,068 sf for garage parking) **Level 2:** 24,649 sf **Level 3:** 25,117 sf **Level 4:** 25,117 sf **Level 5:** 25,117 sf **Level 6:** 18,888 sf **Total:** 151,983 gross sf	**Level 1:** 22,145 sf (8,817 sf for unit interior and commercial space + 13,328 sf for garage parking) **Level 2:** 17,233 sf **Level 3:** 17,421 sf **Level 4:** 17,421 sf **Level 5:** 17,421 sf **Level 6:** 16,631 sf **Total:** 108,272 gross sf	**Level 1 (each unit):** 748 sf (318 sf for unit interior + 430 sf for garage parking) **Level 2:** 748 sf **Level 3:** 748 sf
Height	69 feet 6 stories above ground	71 feet 6 stories above ground	38 feet
Units	**Studio:** 10 units **1-bedroom:** 67 units **2-bedroom:** 40 units **3-bedroom:** 4 units **Total:** 121 units	**Studio:** 10 units **Loft:** 10 units **1-bedroom:** 8 units **2-bedroom:** 40 units **3-bedroom:** 9 units **Total:** 77 units	**3-bedroom:** 9 units
Parking	83 spaces	56 spaces	18 spaces
Commercial Space	Southwest corner: 1,725 sf	Southwest corner: 1,425 sf Southeast corner: 2,350 sf	N/A

sf = square feet

Source: See Appendix A for full site plans

The project would utilize 100 percent of the total lot area of 2.18 acres (98,156 square feet). Common area open space would total 13,570 square feet and would include 600 square feet of plazas and podiums in both Building A and B, an approximately 1,848 square foot public open space along Adams Street between Buildings A and B, an approximately 1,645 square foot dog walk park area, a 600 square foot fountain plaza, a 600 square foot café plaza, and approximately 1,436 square feet of roof decks on Building B. Sidewalks on Clay Street and San Pablo Avenue would also be widened by 1,600 square feet and 730 square feet, respectively. Private open space would total 7,600 square feet and would include private patios in Buildings A and B and the townhouses with a maximum of 100 square feet per unit.

Figure 3 Proposed Site Plan

Source: Trachtenberg Architects, 2021.

Vehicular access to the project site would be provided via two driveways on San Pablo Avenue. The first driveway would be located in between Building A and Building B allowing direct access to the courtyard parking spaces as well as residential garage parking spaces in both buildings. The second driveway would be located further north on San Pablo Avenue at the existing parking lot next to Building B. The second driveway would allow direct access to the relocated easement between Building B and the townhomes, as well as Building B and courtyard parking spaces. There would also be two loading zones, one rideshare pickup zone and 12 bicycle parking spaces located along San Pablo Avenue.

Green Building Features and Landscaping

Pursuant to Section 20.68 of the City of Albany Municipal Code (AMC), the proposed project would be required to comply with the City's Green Building and Bay Friendly Landscaping Ordinance which requires all development projects to incorporate green building standards. Key components of the Bay Friendly Landscaping Ordinance include reducing waste and using materials that contain recycled content; nurturing healthy soils while reducing fertilizer use; conserving water, energy and topsoil; using Integrated Pest Management (IPM) to minimize chemical use; reducing stormwater runoff; and creating wildlife habitat. Landscaping would include new trees around the proposed new buildings and around the perimeter of the site, as well as in the podium gardens of buildings A and B; the project would substantially increase the number of trees on the project site. Water efficient fixtures would be included in the project as required by CalGreen and East Bay Municipal Utility District's (EBMUD) water efficiency checklist.

Construction

Construction would occur over approximately 36 months. Demolition, grading and site preparation would involve the export of approximately 8,650 cubic yards of soil material. Assuming 14 cubic yards of soil material per truck for each phase, the proposed project would require approximately 1,236 round-trip hauling truck trips.

The proposed project would use durable construction materials such as aluminum windows and metal infill panels. Buildings would have a brick veneer or integral color stucco with hard trowel finish as shown in Appendix A.

3 Consistency Analysis

3.1 Criterion (a)

The project is consistent with the applicable general plan designation and all applicable general plan policies as well as with applicable zoning designation and regulations.

The project site has a General Plan designation of San Pablo Mixed Use. As described in the General Plan Land Use Element, this designation "envisions a transformation of this corridor from auto-oriented commercial uses to more attractive, pedestrian-oriented, mixed-use development…Higher density residential uses are strongly encouraged, if they are located above or behind commercial uses facing San Pablo Avenue." The project would consist of higher-density residential development fronted by commercial uses that would contribute to the pedestrian environment and would therefore be consistent with the intent of the San Pablo Mixed Use designation.

The project site is zoned San Pablo Commercial (SPC) and is within a Planned Residential/ Commercial Overlay District (PRC). Pursuant to AMC Section 20.12.060.B2, SPC "encourages the redevelopment of underutilized parcels into pedestrian-oriented retail, office, and high-density residential development, which are preferably in mixed-use settings." Pursuant to AMC Section 20.12.080.3, PCR "is intended to encourage mixed-use developments on large sites on San Pablo Avenue. Exclusively commercial development is also permitted." The project would include both residential units and commercial spaces in Buildings A and B. According to AMC Section 20.12.080.3, "ground floor frontage on San Pablo Avenue shall be commercial." The proposed project would construct approximately 1,725 square feet of commercial space on the southwest corner of Building A as well as an approximately 1,425 square foot commercial space on the southwest corner and a 2,350 square foot commercial space on the southeast corner of Building B fronting San Pablo Avenue. Thus, the proposed mixed-use project would be consistent with the AMC and allowable uses of the project site.

Consistency with applicable City of Albany Municipal Code requirements and Zoning Ordinance requirements for the SPC and PCR zones are analyzed below and shown in Table 2.

Table 2 Consistency with Zoning Ordinance Requirements

	AMC Requirements	Proposed Project
Density/Total Number of Allowed Units (AMC Section 20.24.020.B)	20 units per acre minimum and 63 units per acre maximum[1] 15% density bonus[2] = up to 69 more units can be constructed pursuant to State Density Bonus Standards and City of Albany Municipal Code section 20.40.030.B	94 units per acre
Outdoor Living Space Required (AMC Section 20.24.090.4)	207 units x 200 sf = 41,400 sf[3]	21,170 sf with density bonus concession
Stories/Height (AMC Section 20.24.090.4)	3 stories and 38 feet Allowable under Density Bonus Waiver = 6 stories and 71 feet	Building A: 6 stories and 69 feet Building B: 6 stories and 71 feet

[1] 20 units per acre minimum permitted = 43.6 units for a 2.18-acre site; 63 units per acre maximum permitted = 137.34 units for a 2.18-acre site

[2] Density Bonus Permit: Since the proposed project would include 21 very low-income apartment, the percentage of affordable units in the project would be 15%.

[3] All multifamily dwellings (three or more units) shall provide at least 200 sf of common usable open space per unit. Each square foot of private usable open space, up to a maximum of 100 sf for each individual unit, may be substituted for two sf of common useable open space requirement.

Given the Density Bonus Permit, the proposed project, which includes 21 very low-income units, would receive an additional 50 percent density bonus. Thus, the allowable number of units would increase from 138 to 207.

Pursuant to AMC Section 20.24.070.B1, the requirement for minimum setback from lot line is 15 feet if the property has an exterior lot line at either of the two streets that immediately parallel San Pablo Avenue. As shown in the proposed site plan in Figure 3, both front and rear setbacks would be 15 feet.

AMC Section 20.24.090.4 requires “at least 200 square feet of usable open space for each unit, except that each square foot of private usable open space, up to a maximum of 100 square feet for each individual unit, may be substituted for two square feet of common usable open space requirement.” For the proposed 207 units, 41,400 square feet of outdoor space would be required. However, a density bonus concession requested by the applicant would allow a total of 21,170 square feet of usable open space for the project, with 13,570 square feet of common open space and 7,600 square feet of private open space in the form of patios.

Table 3 analyzes the proposed project’s consistency with applicable General Plan policies. The project would be generally consistent with applicable General Plan policies.

Table 3 Consistency with City of Albany 2035 General Plan Policies

Policy	Consistency
LU 1.1: New Housing Opportunities Create opportunities to meet the housing needs of current and future Albany residents by zoning land for a variety of housing types, particularly on underutilized commercial properties. To the extent possible, new development throughout the city should be leveraged to create on-site and offsite opportunities for housing serving very low, low, and moderate income households.	**Consistent:** The proposed project would involve demolition of the existing commercial structures on site and construction of mixed-use residential and commercial space, including 21 affordable units, which would help meet housing needs within the City.
LU-1.5: Open Spaces Provide a diverse range of open spaces to complement the urbanized areas of the City, including improved parks and playing fields, conservation areas on Albany Hill and along the shoreline, a publicly accessible waterfront, natural areas along creeks, areas for community gardens and urban agriculture, and private open spaces.	**Consistent:** Pursuant to AMC Section 20.24.090.4, the proposed project would increase the amount of public and private open space in the City through the construction of a park and dog walking area along Adams Street, as well as a café plaza and a fountain plaza. The project site does not currently provide usable open space.
LU-1.7: Sustainable Development Ensure that future development mitigates its environmental impacts to the greatest extent possible and is designed and constructed to advance the principles of sustainability. This should include the use of greener and net zero energy building practices, greater energy and water efficiency, and the design of new development in a way that encourages walking and bicycling.	**Consistent:** The proposed project would be required to conform to the City's Green Building Ordinance by including a minimum of 15 percent solar-ready roof area on Buildings A and B, and a solar photovoltaic system meeting the requirements of CEC Section 105.1(c)14 in the townhomes. The project would encourage walking by increasing density in a transit priority area and in proximity to shopping and services. In addition, the project includes widening of sidewalks on Clay Street and San Pablo Avenue, as well as the construction of 256 bicycle parking spaces within Buildings A and B and 12 bicycle parking spaces along San Pablo Avenue.
LU-1.8: Transit-Oriented Development Encourage land use patterns that support transit use, including additional mixed use (commercial and higher-density residential) development along the San Pablo and Solano Avenue corridors.	**Consistent:** The proposed mixed-use project would be located approximately 0.5 miles from the nearest BART station and adjacent to a bus stop on San Pablo Avenue.
LU-1.9: Income Diversity Recognize economic and income diversity as one of Albany's greatest strengths. Ensure that future land use decisions contribute to this diversity by creating housing and employment opportunities for persons of all incomes and backgrounds.	**Consistent:** The proposed project would support very low-income households through the construction of 21 very low-income units.
LU-2.1: Context-Sensitive Design Ensure that infill development in residential areas is compatible in density, scale and character with the established neighborhood context.	**Consistent:** The proposed project would be denser and larger in scale than surrounding development, including residential development to the west and commercial development along San Pablo Avenue. However, the General Plan and AMC envision denser mixed-use development for the San Pablo corridor, as expressed in the intent for the SPC District. The proposed townhomes would be located along Adams Street, allowing for a transition from the denser, taller development along San Pablo Avenue to the lower density residential character of the neighborhood to the west, which includes two- and three-story small apartment buildings as well as single family residences.

Policy	Consistency
LU-2.2: Mixed Density Areas In areas designated for high and medium density residential uses, ensure that new development is designed to minimize sharp contrasts in height, consider the potential for loss of sunlight and privacy for adjacent homes, and provide buffering and screening from nearby lower density uses.	**Consistent:** The proposed project would provide buffers and screening from nearby lower density uses through expanding sidewalks and increasing the number of trees around the site perimeter. The proposed townhomes would be located along Adams Street, allowing for a transition from the denser, taller development along San Pablo Avenue to the lower density residential character of the neighborhood to the west, which includes two- and three-story small apartment buildings as well as single family residences.
LU-2.8: Kains Avenue and Adams Street Maintain Kains Avenue and Adams Street as predominantly residential streets. Land use regulations should limit the encroachment of commercial uses onto parcels that are currently developed with housing. Residential uses along these streets and in adjacent areas should be protected from the potential adverse impacts of commercial uses through special setback requirements. The use of these two streets for primary access to non-residential uses shall be discouraged or prohibited as appropriate.	**Consistent:** Some residential units in Building A, and the proposed townhouses, would front Adams Street. Pursuant to the AMC, there would be a minimum setback requirement of 15 feet from Adams Street. No vehicular access is proposed from Adams Street.
LU-2.12: Residential Beautification Enhance the appearance of residential areas through street tree planting, street lighting and sidewalk improvements, landscaping, and other investments that beautify local streets.	**Consistent:** Pursuant to Section 20.68 of the City of Albany Municipal Code (AMC), the proposed project would be required to comply with the City's Green Building and Bay Friendly Landscaping Ordinance which requires all development projects to incorporate green building standards. Furthermore, the proposed project would include widening sidewalks to accommodate pedestrians on Clay Street and San Pablo Avenue. Moreover, applicant provided site plans in Appendix A shows that the proposed project would increase the number of trees and amount of landscaping over current conditions.

The project would be consistent with the sites' General Plan land use designation, General Plan policies, zoning designation, and zoning regulations. Therefore, the project would meet the requirements of *criterion (a)*.

3.2 Criterion (b)

The proposed development occurs within city limits on a project site of no more than five acres substantially surrounded by urban uses.

The project is located on an approximately 2.18-acre site within a developed urban neighborhood in the City of Albany. It is immediately surrounded by urban uses on all sides. Therefore, the project would be consistent with *criterion (b)*.

3.3 Criterion (c)

The project site has no value as habitat for endangered, rare, or threatened species.

The project site is located within a developed urban area that lacks suitable habitat for sensitive wildlife or plant species. The project site itself is currently developed with three one-story commercial buildings as well as surface parking. Landscaping is limited, with approximately 13 ornamental trees on the western property line. A search on the U.S. Fish and Wildlife Services (USFWS) National Wetlands Inventory was conducted for the project site and surrounding area for the occurrences of wetlands in the vicinity. The search concluded that there are no wetlands on or near the project site (USFWS 2021). Therefore, the project site has no value as habitat for endangered, rare, or threatened species, and the project would meet the requirements under *criterion (c)*.

3.4 Criterion (d)

Approval of the project would not result in any significant effects relating to traffic, noise, air quality, or water quality.

The following discussion provides an analysis of the project's potential effects with respect to traffic, noise, air quality, and water quality.

3.4.1 Traffic

Vehicle Miles Travelled (VMT)

Pursuant to Senate Bill 743, transportation and traffic impacts should be measured using Vehicle Miles Travelled (VMT) instead of the previously used Level of Service (LOS) (Office of Planning and Research 2013). Reducing VMT is an effective climate strategy and would decrease greenhouse gas emissions associated with the transportation sector while increasing benefits to human health. According to Assembly Bill 1560, if a project is located within 0.5 mile of a major transit stop, the project is exempt from further VMT analysis under CEQA. CEQA defines major transit stops as "a site containing an existing rail transit station, a ferry terminal served by either a bus or rail transit service, or the intersection of two or more major bus routes with a frequency of service interval of 15 minutes or less during the morning and afternoon peak commute periods."

The El Cerrito Plaza BART station is an existing rail transit station and therefore qualifies as a major transit stop. The El Cerrito Plaza BART station is located 0.5 miles northeast of the project site and would satisfy the VMT screening criterion of being located within 0.5 of a major transit stop. Furthermore, the El Cerrito Plaza station is served by five different Alameda Contra Costa Transit District (AC Transit) bus lines (71, 72, 72M, 79, 80) (AC Transit 2020), which would increase the use of multi-modal transportation and decrease VMT. Thus, the project would not have a significant impact on VMT.

Site Access

The project site would be accessed via two driveways along San Pablo Avenue. One driveway between proposed Building A and Building B, and one driveway further north on the existing parking lot next to Building B. The project would not increase the number or width of driveways on San Pablo Avenue and would eliminate the existing curb cut on Clay Street. Continuous pedestrian

sidewalks along San Pablo Avenue, Clay Street and Adams Street as well as sidewalk widening along San Pablo Avenue and Clay Street would improve sidewalk connectivity. Pedestrians would have direct access to the project site and associated buildings via sidewalks along San Pablo Avenue and Adams Street. Therefore, the project would provide adequate site access.

Conclusion

Based on the assessment of VMT and site access, there would be no significant impacts related to traffic. Therefore, the project would meet the requirements of *criterion (d).*

3.4.2 Noise

Noise Characteristics and Measurement

Noise level (or volume) is generally measured in decibels (dB) using the A-weighted sound pressure level (dBA). The A-weighting scale is an adjustment to the actual sound power levels to be consistent with that of human hearing response, which is most sensitive to frequencies around 4,000 Hertz (about the highest note on a piano) and less sensitive to low frequencies (below 100 Hertz).

One of the most frequently used noise metrics that considers duration as well as sound power level is the equivalent noise level (L_{eq}). The L_{eq} is defined as the steady A-weighted level that is equivalent to the same amount of energy as that contained in the actual varying levels over a period of time (essentially, L_{eq} is the average sound level).

Noise levels typically attenuate at a rate of 6 dBA per doubling of distance from point sources (such as construction equipment). Noise from lightly traveled roads typically attenuates at a rate of about 4.5 dBA per doubling of distance. Noise from heavily traveled roads typically attenuates at about 3 dBA per doubling of distance, while noise from a point source typically attenuates at about 6 dBA per doubling of distance. Noise levels may also be reduced by the introduction of intervening structures. For example, a single row of buildings between the receptor and the noise source reduces the noise level by about 5 dBA, while a solid wall or berm that breaks the line-of-sight reduces noise levels by 5 to 10 dBA. The construction style for new buildings in California generally provides a reduction of exterior-to-interior noise levels of about 30 dBA with closed windows (Federal Highway Administration [FHWA] 2006).

The time period in which noise occurs is also important since noise that occurs at night tends to be more disturbing than that which occurs during the day. Community noise is usually measured using Day-Night Average Level (DNL), which is the 24-hour average noise level with a 10-dBA penalty for noise occurring during nighttime (10:00 p.m. to 7:00 a.m.) hours, or Community Noise Equivalent Level (CNEL), which is the 24-hour average noise level with a 5 dBA penalty for noise occurring from 7:00 p.m. to 10:00 p.m. and a 10 dBA penalty for noise occurring from 10:00 p.m. to 7:00 a.m. Noise levels described by DNL and CNEL usually do not differ by more than 1 dBA. In practice, CNEL and DNL are used interchangeably.

Noise Standards

The 2035 Albany General Plan Environmental Hazards Element contains requirements pertaining to exterior and interior noise at various land uses. The following policies and actions in the Environmental Hazards Element would apply to the proposed project's noise impacts:

- **Policy EH-5.1: Noise-Sensitive Design:** Ensure that ambient noise levels are considered in the design and planning of new development, including new construction and major alterations. Where appropriate, require noise reduction measures to reduce the exposure of residents and workers to excessive noise levels.
- **Policy EH-5.3: Domestic Noise Sources:** Maintain a Noise Ordinance as part of the Albany Municipal Code to regulate and reduce sources of domestic noise in the city, such as construction, business operations, and yard maintenance.
- **Policy EH-5.4: Roadway Noise:** Continue to work with Caltrans to reduce noise associated with traffic on the I-80 and I-580 freeways and other Caltrans facilities such as San Pablo Avenue. Programs to assist residents and businesses near these highways with reducing interior noise levels should be encouraged.

Chapter 8-1 of the AMC regulates on-site operational noise and construction noise in Albany. The Code is designed to control noise nuisances that have an adverse impact on the health and welfare of people residing within the City of Albany. Section 8-1.4, 8-1.5, and 8-1.6 of the Municipal Code establishes exterior and construction noise standards, respectively.

Section 8-1.4. Exterior Noise Standards

a. It is unlawful for any person at any location within the City of Albany to create any noise or to allow the creation of any noise on property owned, leased, occupied or other-wise controlled by such person which does not comply with the provisions of this section.
b. Exterior noise levels when measured at any receiving single or multiple family residential or public facility zoned property situated in the City of Albany do not conform to the provisions of this section when they exceed the noise level standards set forth in Table I or Table II following (Table 4 and Table 5 of this report):

Table 4 Receiving Land Use: Properties in All *Residential and Public Facilities Zones

Cumulative Number of Minutes in Any One Hour Time Period	Daytime 8:00 am to 10:00 pm	Nighttime 10:00 pm to 8:00 am
30	55	50
15	60	55
5	65	60
1	70	65
0	75	70

*Includes R-1 – (Residential Low Density Single Family), R-2 (Residential Moderate Density), R-3 (Residential High Density), and HD (Hillside District)
Source: Table I in Chapter 8-1 of the AMC

Table 5 Receiving Land Use: Properties in All Other Zones*Not Covered in Table 2

Cumulative Number of Minutes in Any One Hour Time Period	Daytime 8:00 am to 10:00 pm	Nighttime 10:00 pm to 8:00 am
30	65	60
15	70	65
5	75	70
1	80	75
0	85	80

*Includes C-1 – (General Commercial), C-2 (Highway Commercial), and C/S/LI (Commercial, Service, Light Industrial).
Source: Table II in Chapter 8-1 of the AMC

c. In the event the measured ambient noise level exceeds the applicable standards, the thirty (30) minute noise standards in Table I or Table II shall be adjusted so as to equal said ambient noise level plus 5 dB(A), with the fifteen (15), five (5), one (1) and zero (0) minute standards adjusted upwards in 5 dB(A) increments, based on the ambient noise level measured. In no case shall the ambient level standard exceed a 100 dBa standard for the zero (0) minute measurement.

d. If the intruding noise source is continuous and cannot reasonably be discontinued or stopped for a time period whereby the ambient noise level can be measured, the noise level measured while the source is in operation shall be compared directly to the applicable noise level standards in Table I or Table II (Table 4 and Table 5 of this report).

Section 8-1.7. Special Provisions

G. CONSTRUCTION/DEMOLITION

1. Construction and demolition activities conducted within the City of Albany are permitted in the City of Albany, except as follows, which are prohibited:

Operating or causing the operation of any tools or equipment used in construction, drilling, repair, alteration, or demolition work between weekday and Saturday hours of 6:00 p.m. and 8:00 a.m., or 6:00 p.m. and 10:00 a.m. on Sundays or legal holidays such that the sound therefrom creates a noise disturbance across a residential or commercial real property line, except for emergency work of public service utilities shall be prohibited.

2. All construction equipment used in the City of Albany shall be equipped with appropriate sound muffling equipment, which shall be properly maintained, and used at all times such equipment is in operation.
3. The City of Albany Director of Public Works may impose additional restrictions on construction activity if such activity is determined to be creating a noise disturbance, as defined in subsection 8-1.2n of this chapter. Restrictions shall be limited to those restrictions which are necessary to protect the public health, safety and welfare. In any case, the restrictions imposed may not be more restrictive than the general noise limits specified in this chapter.

Existing Ambient Noise Levels

The primary source of noise in the vicinity of the project site is motor vehicle traffic, including automobiles, trucks, buses, and motorcycles along San Pablo Avenue located immediately adjacent east from the project site and traffic along Adams and Clay Street located immediately adjacent west and south of the project site, respectively. While typical neighborhood noise (i.e., car alarms,

conversations, music, door shutting, etc.) would occur at nearby residential and commercial uses, these noise events are generally sporadic and limited in volume. Thus, traffic is the main contributor to existing ambient noise levels.

To characterize existing noise levels in the project vicinity, two 15-minute noise measurements were conducted between 9:21 a.m. and 10:12 a.m. on August 10, 2021, using an Extech 407780A ANSI Type 2, A-weighted integrating sound level meter 5 feet above ground level.

Table 6 identifies the measured noise levels, and Figure 4 shows the on-site noise measurement locations. Short term noise measurement 1 (ST1) was taken along San Pablo Avenue near northeast corner of the site, intended to characterize noise along San Pablo Avenue. The location was sited away from the nearby intersections to avoid capturing vehicle starts and stops. ST2 was taken from the southwest portion of the project site on Adams Street, intended to characterize noise along Adams Street near existing single-family residential receptors to the west and south of the project site.

Table 6 Onsite Noise Measurement Results

Measurement Number	Measurement Location	Primary Noise Sources	Sample Time	L_{eq} (dBA)
1	Northeast corner of project site, along San Pablo Avenue	San Pablo Street	9:21 a.m. – 9:36 a.m.	70
2	Southwest portion of project site, on Adams Street	Adams Street	9:57 a.m. – 10:12 a.m.	50

Source: Rincon field visit on August 10, 2021 using an Extech 407780A ANSI Type II Integrating sound level meter.
Refer to Appendix B for noise measurement data.

Construction Noise

For construction noise assessment, construction equipment can be considered to operate in two modes: stationary and mobile. As a rule, stationary equipment operates in a single location for one or more days at a time, with either fixed-power operation (e.g., pumps, generators, and compressors) or variable-power operation (e.g., pile drivers, rock drills, and pavement breakers). Mobile equipment moves around the construction site with power applied in cyclic fashion, such as bulldozers, graders, and loaders (FTA 2018). Noise impacts from stationary equipment are assessed from the center of the equipment, while noise impacts from mobile construction equipment are assessed from the center of the equipment activity area (e.g., construction site).

The grading phase of project construction tends to create the highest construction noise levels because of the operation of heavy equipment. Grading is anticipated to occur over approximately one month within the 36 months of overall project construction. Construction activities would be required to occur between the hours of 8:00 a.m. and 6:00 p.m. Monday-Saturday and 10:00 a.m. to 6:00 p.m., Sundays and legal holidays pursuant to the City's Noise Ordinance.

Project construction noise was modeled by the loudest construction phase, grading, to estimate noise levels that would be generated by construction activities at nearby residential uses. Noise levels for each construction phase of the project were estimated using the Federal Highway Administration's (FHWA) Roadway Construction Noise Model (RCNM) based on applicant provided equipment (Appendix B). RCNM estimates the combined noise levels produced by specific

Figure 4 Noise Measurement Locations

Imagery provided by Microsoft Bing and its licensors © 2021.

equipment in each phase of construction based on the distance to the nearest receptor. Noise levels are based on a grader, dozer and front-end loader operating simultaneously, which would occur under the most intensive construction phase, grading. The type of equipment utilized during the grading phase was based on applicant provided information. Over the course of a typical construction day, construction equipment would be located as close as 45 feet to adjacent properties (e.g., the residences to the west) but would typically be located at an average distance farther away due to the nature of construction and the lot size of the project. Therefore, it is assumed that over the course of a typical construction day the construction equipment would operate at an average distance of 160 feet from the nearest residential property to the west.

Although the AMC has established hours of construction in Section 8-1.5, the City of Albany has not adopted a quantitative threshold for evaluating construction noise impacts. Therefore, this analysis relies on the reasonable criteria provided by the FTA for assessing construction noise impacts based on the potential for adverse community reaction in its *Transit and Noise Vibration Impact Assessment Manual* (FTA 2018). For residential uses, the daytime noise threshold is 80 dBA L_{eq} for an 8-hour period.

Using the FHWA RCNM to estimate noise associated with construction equipment, maximum hourly noise levels are calculated to be approximately 73 dBA L_{eq} at 160 feet, as measured from the average distance of construction activities on a typical day. RCNM calculations are included in Appendix B. This would not exceed the FTA noise threshold of 80 dBA L_{eq}. Additionally, construction would be required to occur between the hours of 8:00 a.m. and 6:00 p.m., outside typical residential noise-sensitive hours including common sleep hours, Monday through Saturday, as stated in Section 8-1.5 of the AMC. Therefore, the project would not have a significant construction noise impact.

Construction Vibration

Vibration is a unique form of noise because its energy is carried through buildings, structures, and the ground, whereas sound is simply carried through the air. Thus, vibration is generally felt rather than heard. Some vibration effects can be caused by noise (e.g., the rattling of windows from passing trucks). This phenomenon is caused by the coupling of the acoustic energy at frequencies that are close to the resonant frequency of the material being vibrated. Typically, ground-borne vibration generated by manmade activities attenuates rapidly as distance from the source of the vibration increases.

No quantitative standards are established under the City's Municipal Code. The Caltrans *Transportation and Construction Vibration Guidance Manual* (2020) is used to evaluate potential construction vibration impacts related to both potential building damage and human annoyance. Based on the Caltrans criteria described above, construction vibration impacts would be significant if vibration levels exceed 0.2 in./sec. peak particle velocity (PPV) for residential structures, which are the limits where minor cosmetic, i.e., non-structural, damage may occur to these buildings. In addition, construction vibration impacts would cause human annoyance at nearby receivers if vibration levels exceed 0.24 in./sec. PPV, which is the limit where vibration becomes distinctly perceptible from barely perceptible. Groundborne noise and vibration would be significant if it exceeded these standards.

Construction activities known to generate excessive ground-borne vibration, such as pile driving, would not be conducted to implement the project. The greatest anticipated source of vibration during general project construction activities would be from a dozer (large bulldozer used as proxy), which would be used during demolition activities and, when accounting for building setbacks, may be used within 60 feet of the nearest off-site residential structure. A dozer would create

approximately 0.034 in./sec. PPV at a distance of 60 feet[1] (Caltrans 2020). This would be lower than what is considered a distinctly perceptible impact for humans of 0.25 in./sec. PPV, and the structural damage impact to residential structures of 0.5 in./sec. PPV. Therefore, temporary vibration impacts associated with the dozer (and other potential equipment) would be less than significant.

The project does not include substantial vibration sources associated with operation. Therefore, operational vibration impacts would be less than significant.

Operational Noise

Onsite-noise sources and traffic noise were modeled with SoundPLAN. Propagation of modeled stationary noise sources was based on ISO Standard 9613-2, "Attenuation of Sound during Propagation Outdoors, Part 2: General Method of Calculation." The assessment methodology assumes that all receivers would be downwind of stationary sources. This is a worst-case assumption for total noise impacts, since, in reality, only some receivers would be downwind at any one time.

On-site noise sources would include waste hauling, parking activities, landscape maintenance, general outdoor site activities, condensers, and the heating, ventilation, and air conditioning (HVAC) equipment. Due to the distances and low noise levels associated with general site activities, waste hauling, parking activity, and landscape maintenance, these sources are not considered substantial and are not analyzed further. Thus, the primary noise source of concern would be associated with the HVAC units for the project building since there is no specific regulation beyond the limitation of noise levels.

Mechanical Equipment

The primary mechanical equipment noise generator from the project would be HVAC. The HVAC units used in this analysis are shown in Table 7 (see Appendix B for manufacturer's specifications). This analysis assumes the use of a typical HVAC system for commercial or multi-family residential sites. The units used in this analysis are a 1.5-ton and 3-ton Carrier 38HDR Performance Series Air Conditioner (see Appendix B for manufacturer's specifications). The project is anticipated to include 260 1.5-ton HVAC units located on the rooftops of Buildings A and B. For the nine townhomes, the project was assumed to contain nine 3-ton HVAC units based upon one ton of HVAC per 600 sf of building space. The manufacturer's noise data lists the sound power levels of each HVAC unit as shown in Table 7. All units were modeled as being three feet above the roof elevation. For Building A and Building B, parapet walls at 4.5 feet were modeled on each rooftop based on applicant provided information. This analysis conservatively assumes the equipment would operate continuously for a full hour (100 percent for 60 minutes) during the daytime and nighttime, and that no screening would be used for the proposed HVACs.

[1] $PPV_{equipment} = PPV_{ref}(25/D)^n$ (in/sec) where PPV_{ref} is the reference PPV at 25 feet (0.210 in/sec for rollers), D is the distance from equipment to the receiver in feet, and n is 1.1 (the value related to the attenuation rate through ground) (Caltrans 2013b).

Table 7 Modeled Equipment

Use/Description	Model	Unit Model Number	Unit Type	Estimated Units	Sound Power Level per Unit
Building A and Building B	38HDR Performance Series Air Conditioner with Puron Refrigerant	38HDR018	HVAC	260	68
Townhomes	38HDR Performance Series Air Conditioner with Puron Refrigerant	438HDR036	HVAC	9	72

See Appendix B for sample Manufacturer specification sheets.

The proposed project may expose nearby sensitive receivers to a permeant increase in ambient noise. Existing receivers may periodically be subject to project operational noise from HVAC units on-site. Noise levels at adjacent properties are shown in Table 8 and displayed on Figure 5 as receivers OFF-1 through OFF-20. As shown in Table 8, project operational noise levels would not exceed the City's daytime and nighttime noise limits of 55 dBA L_{eq} and 50 dBA L_{eq} for residential use and public facilities (PF), and 65 dBA L_{eq} and 60 dBA L_{eq} for all other zones, respectively at the nearby receivers. Therefore, operational project noise would not exceed City standards at off-site noise-sensitive receivers and impacts would be less than significant.

Table 8 HVAC Noise Levels at Off-site Receivers (dBA L_{eq})

Receiver	Description	Daytime Noise Level (dBA)[1]	Exceed Daytime Thresholds?[2]	Nighttime Noise Level (dBA)[1]	Exceed Nighttime Thresholds?[2]
OFF-1	Residential High Density (Zoned R-3)	23	No	23	No
OFF-2	Residential Medium Density (zoned R-2)	23	No	23	No
OFF-3	Residential Medium Density (zoned R-2)	28	No	28	No
OFF-4	Residential Medium Density (zoned R-2)	28	No	28	No
OFF-5	Residential Medium Density (zoned R-2)	28	No	28	No
OFF-6	Residential Medium Density (zoned R-2)	29	No	29	No
OFF-7	Residential Medium Density (zoned R-2)	30	No	30	No
OFF-8	Residential Medium Density (zoned R-2)	30	No	30	No
OFF-9	Residential Medium Density (zoned R-2)	31	No	31	No
OFF-10	Residential Medium Density (zoned R-2)	32	No	32	No
OFF-11	Residential Medium Density (zoned R-2)	31	No	31	No
OFF-12	Residential Medium Density (zoned R-2)	31	No	31	No
OFF-13	Residential Medium Density (zoned R-2)	31	No	31	No
OFF-14	Residential Medium Density (zoned R-2)	30	No	30	No
OFF-15[1]	Residential Medium Density (zoned R-2)	30	No	30	No
OFF-16	Orientation Center for the Blind (zoned PF)	30	No	30	No
OFF-17	Albany Care Center	28	No	28	No
OFF-18	San Pablo Commercial	26	No	26	No
OFF-19	San Pablo Commercial	25	No	25	No
OFF-20	San Pablo Commercial	22	No	22	No

[1]HVACs are assumed to operate continuously for a full hour (100 percent for 60 minutes) during the daytime and nighttime.

[2]For residential use and public facilities (PF), the applicable exterior threshold is 55 dBA L_{eq} from 8:00 a.m. to 10:00 p.m. and 50 dBA L_{eq} from 10:00 p.m. to 8:00 a.m. For all other zones, the applicable exterior threshold is 65 dBA L_{eq} from 8:00 a.m. to 10:00 p.m. and 60 dBA L_{eq} from 10:00 p.m. to 8:00 a.m.

Figure 5 Operational Noise Level Contours

Imagery provided by Microsoft Bing and its licensors © 2021.

Fig X Operational Noise Level Contours

Offsite Traffic Noise

Noise affecting the project site is primarily from traffic on San Pablo Avenue. Project traffic was estimated using the average daily trips (ADT) from Table 4.2 of the California Emissions Estimator Model (CalEEMod), version 2020.4.0. CalEEMod provided by Rincon Consultants (Appendix C). The total trips were estimated to be approximately 1,387 ADT (Rincon Consultants 2021). Existing traffic count estimates along the adjacent street segments to the project site combined with project ADT are shown in Table 9. Existing traffic counts for San Pablo Avenue were obtained from the California Department of Transportation (Caltrans) *2019 Traffic Volumes on California State Highways*, the most recently available traffic count information. According to the Caltrans traffic data (2019), the Annual Average Daily Traffic (AADT) volume along San Pablo Avenue is 27,900 vehicles.[2] The existing traffic volume on Clay Street were estimated using typical roadway traffic volume data from the *Highway Capacity Manual* (HCM 6th Edition). The HCM has published ADT based on roadway types and level of congestion. Based on knowledge of the local area, Clay Street can be classified as a two-lane local roadway operating at Level of Service C, which represents the least-congested traffic conditions. Based on this classification, existing traffic volumes Clay Street would estimated at approximately 3,000 ADT.

Table 9 Existing and Proposed ADT Volume

Street	Segment	Existing ADT	Project ADT[1]	Existing Plus Project ADT
Clay Street	Eastbound	1,500	694	2,194
Clay Street	Westbound	1,500	694	2,194
San Pablo Avenue	Southbound	14,250	694	28,594
San Pablo Avenue	Northbound	14,250	694	28,594

[1] Project ADT obtained from CalEEMod "Annual" Emissions (Appendix C). Trip generation based on ITE (10th Edition) land use code 221 for "multi-family mid-rise" and 231 for "mid-rise residential with first floor commercial". ADT divided equally between street segments for purposes of this analysis.

Source: Caltrans 2019; GHD 2021; Rincon Consultants 2021

The posted speed limit on San Pablo Avenue is 30 miles per hour, while the speed limit for Clay Street is 15 miles per hour. For a conservative approach to the vehicle classification mix for modeling, heavy trucks were assumed to reach at least 1 percent of the vehicle classification mix, resulting in 98 percent automobiles, 1 percent medium trucks, and 1 percent heavy trucks. Peak hour traffic was assumed to be approximately 10 percent of the roadway's total ADT in the model as 10 percent peak hour traffic noise level is considered equivalent to CNEL

For conservative estimate, the project would generate approximately 1,387 total vehicle trips on San Pablo Avenue and 1,387 total vehicle trips on Clay Street, resulting in a total trip volume increase of 28,594 trips on San Pablo Avenue (Southbound), 28,594 trips on San Pablo Avenue (Northbound), 2,194 trips on Clay Street (Eastbound), and 2,194 trips on Clay Street (Westbound)[3]. Assuming all vehicle trips occur on each roadway, the project would result in traffic increases on Clay Street of 46 percent and traffic increases on San Pablo Avenue of 3 percent. This would result in an approximate noise level increase of 1.7 dBA on Clay Street and 0.1 dBA on San Pablo Avenue.

[2] Caltrans data for San Pablo Avenue only contains ADT for "ahead" or northbound trips, and not "back" or southbound trips, therefore "ahead" ADT was applied to "back" ADT.

[3] The project site would not consist of any driveways off Clay Street. However, for conservative purposes of this analysis, Clay Street was estimated for doubling of traffic noise.

Roughly a doubling of traffic volume would be necessary to generate a perceptible increase in roadway noise levels of 3 dBA or more. Therefore, the project's traffic noise increase would not exceed 3 dBA or more, and impacts would be less than significant.

Conclusion

The project would not result in a significant long-term increase in traffic noise levels, and temporary construction noise impacts would be less than significant based on compliance with the City's time restrictions on construction activities pursuant to the City's standard conditions for the project. The project's operational noise would be similar to noise from nearby residences and would be less than significant in the context of the existing noise in the surrounding area. Therefore, noise-related impacts resulting from implementation of the project would be less than significant. The project would meet the requirements for noise under *criterion (d)*.

3.4.3 Air Quality

A significant adverse air quality impact may occur when a project individually or cumulatively interferes with progress toward the attainment of the ozone standard by releasing emissions that equal or exceed the established long-term quantitative thresholds for pollutants or causes an exceedance of a state or federal ambient air quality standard for any criteria pollutant. Primary criteria pollutants are emitted directly from a source (e.g., vehicle tailpipe, an exhaust stack of a factory, etc.) into the atmosphere. Commonly found primary criteria pollutants include reactive organic gases (ROG), nitric oxides (NO_x), carbon monoxide (CO), and particulate matter (PM_{10} and $PM_{2.5}$). PM_{10} is particulate matter measuring no more than 10 microns in diameter, while $PM_{2.5}$ is fine particulate matter measuring no more than 2.5 microns in diameter.

Significance Thresholds

Because the project site is located within the San Francisco Bay Area Air Basin (SFBAAB) and falls under the Bay Area Air Quality Management District (BAAQMD), this air quality analysis conforms to the methodologies recommended in the BAAQMD's 2017 CEQA Air Quality Guidelines (BAAQMD 2017). The following significance thresholds have been recommended by the BAAQMD for construction-related air quality impacts and project operation-related air quality impacts. For the purposes of this analysis, the project would result in a significant impact if construction or operational emissions would exceed any of the thresholds shown in Table 10.

Table 10 BAAQMD Air Quality Thresholds of Significance

Pollutant/Precursor	Construction: Average Daily Emissions (lbs/day)	Operation: Average Daily Emissions (lbs/day)	Operation: Maximum Annual Emissions (tpy)
ROG	54	54	10
NO_X	54	54	10
PM_{10}	82 (exhaust)	82	15
$PM_{2.5}$	54 (exhaust)	54	10

lbs/day = pounds per day; tpy = tons per year; ROG = reactive organic gases; NO_X = oxides of nitrogen; PM_{10} = respirable particulate matter with an aerodynamic resistance diameter of 10 micrometers or less.; $PM_{2.5}$ = fine particulate matter with an aerodynamic resistance diameter of 2.5 micrometers or less

Source: BAAQMD 2017, Table 2-2

In the absence of a qualified Community Risk Reduction Plan, BAAQMD has established the following *Thresholds of Significance* for local community risks and hazards associated with toxic air contaminants (TACs) and $PM_{2.5}$ for assessing individual source impacts at a local level. Impacts would be significant if:

- The project would result in an increased cancer risk of > 10 in one million
- The project would result in an increased non-cancer (i.e., Chronic or Acute) risk of > 1.0 Hazard Index
- The project would result in an ambient $PM_{2.5}$ concentration increase of > 0.3 microgram per meter cubed ($\mu g/m^3$) annual average

A project would be considered to have a cumulatively considerable impact if the aggregate total of current and proposed TAC sources within a 1,000 feet radius of the project fence-line in addition to the project would exceed the *Cumulative Thresholds of Significance*. Impacts would be significant if:

- The project would result in an increased cancer risk of > 100 in one million
- The project would result in an increased non-cancer (i.e., Chronic or Acute) risk of > 10 Hazard Index
- The project would result in an ambient $PM_{2.5}$ concentration increase of > 0.8 $\mu g/m^3$ annual average

Methodology

Since the proposed project would involve the demolition of existing structures on the project site, specifically three one-story commercial buildings including the Albany Bowl bowling alley, a Metro PCS store, and A&M Residential and Commercial Glass Repair store, the BAAQMD construction screening criteria would not apply to this project. Air pollutant emissions generated by project construction and operation were thus estimated using the California Emissions Estimator Model (CalEEMod), version 2020.4.0. CalEEMod uses project-specific information, including the project's land uses, square footages for different uses (e.g., residential, commercial, townhouses), and location, to model a project's construction and operational emissions. The analysis reflects the construction and operation of the project as described under *Project Description*.

Construction Emissions

Construction emissions modeled include emissions generated by construction equipment used on-site and emissions generated by vehicle trips associated with construction, such as worker and vendor trips. CalEEMod estimates construction emissions by multiplying the amount of time equipment is in operation by emission factors. Construction of the proposed project was analyzed based on the applicant-provided construction schedule and construction equipment list. Construction would occur over approximately 36 months, and approximately 8,650 cubic yards of soil would be exported from the site for demolition, grading and site preparation. It is assumed that all construction equipment used would be diesel-powered. This analysis assumes that the project would comply with all applicable regulatory standards. In particular, the project would comply with BAAQMD Regulation 8 Rule 3 for architectural coatings and BAAQMD Regulation 6 Rule 3 for wood-burning devices.

Operational Emissions

Operational emissions modeled include mobile source emissions (i.e., vehicle emissions), energy emissions, and area source emissions. Mobile source emissions are generated by vehicle trips to and from the project site, and CalEEMod default rates were used. Emissions attributed to energy use include natural gas consumption by appliances as well as for space and water heating. Area source emissions are generated by landscape maintenance equipment, consumer products and architectural coatings.

Construction Emissions

Project construction would involve demolition, site preparation, grading, building construction, paving, and architectural coating activities that have the potential to generate air pollutant emissions. Table 11 summarizes the estimated maximum daily emissions of ROG, NO_X, CO, PM_{10} exhaust, $PM_{2.5}$ exhaust, and sulfur oxide (SO_x) during project construction. As shown in Table 11, project construction emissions for all criteria pollutants would be below the BAAQMD average daily thresholds of significance and therefore would be less than significant.

Table 11 Project Construction Average Daily Emissions

	Emissions (lbs/day)					
Year	**ROG**	**NO_X**	**CO**	**PM_{10} (exhaust)**	**$PM_{2.5}$ (exhaust)**	**SO_X**
2022	2	22	13	1	1	<0.1
2023	2	10	13	<1	<1	<0.1
2024	1	10	12	<1	<1	<0.1
2025	30	9	12	<1	<1	<0.1
Maximum Daily Emissions	30	22	13	1	1	<0.1
BAAQMD Thresholds (average daily emissions)	54	54	N/A	82	54	N/A
Threshold Exceeded?	No	No	N/A	No	No	N/A

See Appendix C for CalEEMod worksheets; emission data presented is the highest of winter or summer outputs

N/A = not applicable; lbs/day = pounds per day; ROG = reactive organic gases; NO_X = oxides of nitrogen; CO = Carbon Monoxide; $PM_{2.5}$ = fine particulate matter with an aerodynamic resistance diameter of 2.5 micrometers or less; PM_{10} = respirable particulate matter with an aerodynamic resistance diameter of 10 micrometers or less; SO_x = oxides of sulfur.

No BAAQMD threshold for CO or SO_X

Operational Emissions

Long-term emissions associated with project operation are shown in Table 12. Emissions would not exceed BAAQMD daily thresholds for any criteria pollutant. Since project emissions would not exceed BAAQMD thresholds for construction or operation, the project would not violate an air quality standard or result in a cumulatively considerable net increase in criteria pollutants and impacts would be less than significant.

Table 12 Project Operational Average Daily Emissions

Sources	Average Daily Emissions (lbs/day)					
	ROG	NO_X	CO	PM_{10} (exhaust)	$PM_{2.5}$ (exhaust)	SO_X
Total Operational Emissions	9	4	43	<1	<1	<0.1
BAAQMD Thresholds	54	54	N/A	82	54	N/A
Threshold Exceeded?	No	No	N/A	No	No	N/A

See Appendix C for CalEEMod worksheets; emission data presented is the highest of winter or summer outputs

N/A = not applicable; lbs/day = pounds per day; ROG = reactive organic gases; NO_X = oxides of nitrogen; CO = Carbon Monoxide; $PM_{2.5}$ = fine particulate matter with an aerodynamic resistance diameter of 2.5 micrometers or less; PM_{10} = respirable particulate matter with an aerodynamic resistance diameter of 10 micrometers or less; SO_x = oxides of sulfur.

No BAAQMD threshold for CO or SO_X

Toxic Air Contaminants

TACs are a diverse group of air pollutants that may cause or contribute to an increase in deaths or serious illness, or that may pose a present or potential hazard to human health. TACs include both organic and inorganic chemical substances that may be emitted from a variety of common sources, including gasoline stations, motor vehicles, dry cleaners, industrial operations, painting operations, and research and teaching facilities. One of the main sources of TACs in California is diesel engine exhaust that contains solid material known as diesel particulate matter (DPM). More than 90 percent of DPM is less than one micron in diameter (about 1/70th the diameter of a human hair) and thus is a subset of $PM_{2.5}$. Because of their extremely small size, these particles can be inhaled and eventually trapped in the bronchial and alveolar regions of the lungs (CARB 2021). Within the SFBAAB, DPM accounted for approximately 85 percent of the cancer risk from air toxics in the region with mobile sources being one of the top contributors (BAAQMD 2016, 2020)

Construction Impacts

Generation of DPM from construction projects typically occurs in a single area for a short period. Construction of the proposed project would occur over approximately 36 months. The dose to which the receptors are exposed is the primary factor used to determine health risk. Dose is a function of the concentration of a substance or substances in the environment and the extent of exposure that person has with the substance. Dose is positively correlated with time, meaning that a longer exposure period would result in a higher exposure level for the Maximally Exposed Individual. The risks estimated for a Maximally Exposed Individual are higher if a fixed exposure occurs over a longer period of time. According to the Office of Environmental Health Hazard Assessment, health risk assessments, which determine the exposure of sensitive receptors to toxic emissions, should be based on a 70-year exposure period; however, such assessments should be limited to the period/duration of activities associated with the project. The BAAQMD recommends an exposure period of 30-years (BAAQMD 2016b). Thus, the duration of proposed construction activities (i.e., 36 months) is approximately ten percent of a 30-year exposure period used for health risk calculation. Current models and methodologies for conducting health-risk assessments are associated with longer-term exposure periods of 9, 30, and 70 years, which do not correlate well with the temporary and highly variable nature of construction activities, resulting in difficulties in producing accurate estimates of health risk (BAAQMD 2017). Therefore, this analysis qualitatively discusses potential health risks associated with construction-related emissions of TACs, focusing on

construction activities most likely to generate substantial TAC emissions and the duration of such activities relative to established, longer-term health risk exposure periods.

The maximum PM_{10} and $PM_{2.5}$ emissions would occur during site preparation and grading activities. These activities would last for approximately one and a half months. PM emissions would decrease for the remaining construction period because construction activities such as building construction and architectural coating would require less construction equipment. While the maximum DPM emissions associated with site preparation and grading activities would only occur for a portion of the overall construction period, these activities represent the maximum exposure condition for the total construction period. The duration of site preparation and grading activities would represent less than one percent of the total exposure period for a 30-year health risk calculation. Therefore, DPM generated by project construction would not create conditions where the probability is greater than 10 in one million of contracting cancer for the Maximally Exposed Individual or to generate ground-level concentrations of non-carcinogenic TACs that exceed a Hazard Index greater than one for the Maximally Exposed Individual. This impact would be less than significant.

Operational Impacts

Common sources of operational TACs and $PM_{2.5}$ include gasoline stations, diesel backup generators, truck distribution centers, freeways, and other major roadways (BAAQMD 2017). The project would not involve construction of gas stations, dry cleaners, highways, nor roadways. The project would also would not install a diesel backup generator. Therefore, the project would not include sources of operational TAC and impacts would be less than significant.

However, the project would site new sensitive receptors within TAC sources. A review of the BAAQMD's *Permitted Stationary Source Risk and Hazards* mapping tool (BAAQMD 2021) identified one stationary sources (European Motor Works) approximately 290 feet south of the project site southern boundary. The source has no risks or hazards associated with it and was not included in the TAC analysis. However, the project is immediately west of State Route 123 (San Pablo Avenue).

For screening purposes BAAQMD uses AERMOD[4] to model cancer risk and $PM_{2.5}$ concentrations associated with highways, major roadways, and railroads in the Bay Area, providing raster data indicating health risk associated with each of these sources. For this analysis cancer risk and $PM_{2.5}$ concentrations associated with the aforementioned roadway source were reviewed at 39 discrete receptors located around the proposed multi-family residential buildings and townhouses. To provide a conservative analysis, only the greatest cancer risk and $PM_{2.5}$ concentrations are provided in Table 13. In addition, pursuant to the requirements of the 2019 California Energy Code (Title 24, Part 6), new high-rise residential construction, which is a building with four or more habitable floors, is required to install Minimum Efficiency Reporting Value (MERV) 13 or equivalent filters for heating and cooling ventilation systems under Section 120.1(b)1. Low-rise residential buildings under Section 150.0(m)12C must also be provided air filters that are equal to or greater than MERV 13. The risks and hazards reported in Table 13 do account for the 2019 California Energy Code Title 24 filtration requirements.

Table 13 shows the risks and hazards from the TAC sources adjusted to include MERV 13 filtration. In the adjusted risk and hazard calculations, it was assumed that residents would spend approximately 16.4 hours per day indoors and 2.1 hours per day outdoors (United States Environmental Protection Agency 2011). MERV-13 filtration was assumed to have a 90 percent

[4] A steady-state plume model that incorporates air dispersion based on planetary boundary layer turbulence structure and scaling concepts, including treatment of both surface and elevated sources, and both simple and complex terrain.

particulate filtration efficiency (Singer et al. 2016). As shown in Table 13, with MERV-13 filtration the cancer risk and $PM_{2.5}$ concentration from State Route 123 would be below the BAAQMD single-source health risk thresholds. Therefore, single-source impacts from TAC sources upon the project would be less than significant.

Table 13 Individual and Cumulative Cancer Risk and Particulate Matter Concentrations

Source ID[1]	Description	Distance to Project Site (feet)	Cancer Risk (per million)	$PM_{2.5}$ Concentration (µg/m3)	Increased Non-Cancer Risk (Chronic Hazard Index)
N/A	State Route 123 - Highway	30	2.8	0.06	N/A
BAAQMD Individual Source Screening Threshold			10	0.3	1
Individual Source Threshold Exceeded?			No	No	No

[1] Source IDs presented here are those used in the Stationary Source Screening Analysis Tool.

N/A: not applicable; data was not provided in the BAAQMD risk screening values.

Source: Appendix C, Health Risk Report

Conclusion

Based on the CalEEMod calculations, both construction and operational emissions would be below BAAQMD thresholds and less than significant. DPM generated by project construction would not expose sensitive receptors to TACs that would exceed applicable thresholds due to the length of the construction schedule. Pursuant to the requirements of the 2019 California Energy Code, the installation of MERV-13 filtration in the proposed development would be able to filter 90 percent of particulate for future residents on the project site. Thus, with MERV-13 filtration the cancer risk and $PM_{2.5}$ concentration from State Route 123 would be below the BAAQMD single-source health risk thresholds and result in less than significant impacts. There would be less than significant impacts from TACs in both construction and operational phases. Therefore, the project would meet the requirements for Air Quality under *criterion (d)*.

3.4.4 Hydrology and Water Quality

Urban runoff can have a variety of deleterious effects. Oil and grease contain a number of hydrocarbon compounds, some of which are toxic to aquatic organisms at low concentrations. Heavy metals such as lead, cadmium, and copper are the most common metals found in urban stormwater runoff. These metals can be toxic to aquatic organisms and have the potential to contaminate drinking water supplies. Nutrients from fertilizers, including nitrogen and phosphorous, can result in excessive or accelerated growth of vegetation or algae, resulting in oxygen depletion and additional impaired uses of water.

Currently, the project site is almost entirely covered in impervious paving and existing structures. The project would replace the impervious surface with 2.18 acres (95,156 square feet) of new impervious paving, landscaping and new buildings. Impervious surfaces would be slightly reduced from existing conditions due to a slight increase in permeable area from landscaped areas. Therefore, the project would not substantially increase runoff from the project site such that new or increased flooding would occur on- or off-site.

The project is also a C3 regulated project under the Municipal Regional National Pollutant Discharge Elimination System Stormwater Permit (MRP), defined as projects that create or replace 10,000 square feet or more of impervious surface, and would therefore be subject to the current Municipal

National Pollutant Discharge Elimination System (NPDES) permit (Clean Water Program 2012). Since the project site is larger than the Clean Water Program threshold of 10,000 square feet, the project would require stormwater treatment (Clean Water Program 2012). Low Impact Development (LID) practices minimize impacts on water quality and reduce stormwater runoff by requiring Best Management Practices (BMPs) to be utilized to control pollutant discharge. Pursuant to AMC Section 15-4.7.3, BMPs for new developments include providing filter materials at catch basins to impede debris and dirt from flowing into the City's storm sewer system. BMPs for construction specified in the Clean Water Program include preparing and using sediment and erosion control plans, as well as minimizing exposed soil by stabilizing slopes.

The proposed project would not substantially increase stormwater runoff and would be required to comply with the current Municipal NPDES Permit and LID requirements. Since the project would be required to implement BMPs during construction and permanent LID measures during operation to ensure that water quality is not degraded, impacts related to water quality would be less than significant.

Conclusion

The proposed project would be required to comply with LID practices under the City's Clean Water Program and BMPs pursuant to AMC Section 15-4.7.3, and is also a C3 regulated project under the MRP and would be subject to the NPDES permit. Since the project would be in compliance with BMPs during construction and implement LID measures impacts related to water quality would be less than significant. Therefore, the project would meet the requirements for Hydrology and Water Quality under *criterion (d)*.

3.5 Criterion (e)

The project site is adequately served by all required utilities and public services.

The project would be located in an existing urban area on a developed site served by existing public utilities and services. All services and utilities are therefore available to serve the proposed project.

The East Bay Municipal Utility District (EBMUD) provides water and wastewater services to the City of Albany and would continue to provide these services to the proposed project. Wastewater in the City of Albany is served by EBMUD Special District No.1, with an average dry weather flow of 54 MGD from 2010 to 2019. Current 2020 average flows are approximately 52 MGD. The plant capacity is sufficient for current dry and wet weather loads and for future load projections. Furthermore, EBMUD's recycled water use management policies reduces the demand for potable water supply, increasing water supply reliability during droughts (EBMUD 2020). As seen in Table 14, the proposed project would generate an estimated 26,110 gallons of wastewater per day. The increase in wastewater generation associated with the project would be approximately 0.04 percent of the existing unused capacity of the EBMUD Special District No.1.

Table 14 Estimated Wastewater Generation

Type of Use	Quantity	Generation Factor (per day)	Amount (gallons per day)
Residential – Studio*	20 du	80 gallons/du/day	1,600
Residential – Loft*	10 du	80 gallons/du/day	800
Residential – 1-bedroom*	75 du	120 gallons/du/day	9,000
Residential – 2-bedroom*	80 du	120 gallons/du/day	9,600
Residential – 3-bedroom*	13 du	200 gallons/du/day	2,600
Residential – 3-bedroom townhouse*	9 du	230 gallons/du/day	2,070
Commercial Use	5,500 sf	80/1000 gross sf	440
Total			**26,110**

* Assumes project would include 20 studios, 10 lofts, 75 one-bedroom, 80 two-bedroom, 13 three-bedroom apartment units, and 9 three-bedroom townhouse units.

Notes: sf= square feet, du=dwelling unit

Source: City of Los Angeles CEQA Thresholds Guidelines (2006)

Fire services are provided by the Albany Fire Department and police protection services are provided by the Albany Police Department. Solid waste collection services are provided through a franchise agreement with Waste Management of Alameda County. Other services, including gas and electricity, are provided by Pacific Gas & Electric (PG&E), and telephone service by AT&T. The proposed increase of 207 residential units on the site would be served by existing service and utility providers.

The project site is located within the Albany Unified School District (AUSD), which operates three elementary schools, a middle school, two high schools, and a pre-school (City of Albany 2016). The applicant would be required to pay school impact fees to offset potential impacts to the AUSD. As set forth in California Government Code Section 65995, the payment of development fees mitigates potential impact to school districts.

Conclusion

The proposed project involves infill development on a project site already developed with three one-story commercial buildings served by existing utilities and public services. As discussed under criterion (a), the project is within the allowed density for the site and is consistent with the 2035 General Plan land use designation for the site. The project would not change the site's use or increase the intensity of use such that existing utility and public service providers would not be able to serve the project site. Therefore, the project would meet the requirements for Utilities and Service Systems under *criterion (e)*.

4 Exceptions to the Exemption

CEQA Guidelines Section 15300.2 outlines exceptions to the applicability of a Categorical Exemption, including cumulative impacts, significant effects due to unusual circumstances, scenic highways, hazardous waste sites, and historical resources. As demonstrated below, none of the exceptions would apply.

4.1 Cumulative Impacts Criterion

State CEQA Guidelines Section 15300.2 states that "all exemptions for these classes are inapplicable when the cumulative impact of successive projects of the same type in the same place, over time is significant." As discussed in the individual sections above, the project would incrementally increase air pollution and motor vehicle trips on area roadways. Nonetheless, impacts related to these issue areas were found to be less than significant and the project would not result in a cumulatively considerable contribution to potential cumulative impacts. The project would not affect sensitive biological resources, would not contribute pollutants such that water quality would be impacted, and would be served by available utilities and public services. Therefore, impacts related to these issue areas were found to be less than significant and the project would not result in a cumulatively considerable contribution to potential cumulative impacts. The project would involve temporary noise and vibration during construction; however, these effects are localized and would cease upon cessation of construction activities. Therefore, the project would not result in a cumulatively considerable contribution to a cumulative noise increase. Overall, the project would not result in significant cumulative impacts. Therefore, this exception does not apply to the proposed project.

4.2 Significant Effects due to Unusual Circumstances Criterion

State CEQA Guidelines Section 15300.2 states that "a categorical exemption shall not be used for an activity where there is a reasonable possibility that the activity will have a significant effect on the environment due to unusual circumstances." As discussed under *Project Description* above, the project site is currently developed with existing structures, surface parking and landscaping. The project site is generally flat and does not possess characteristics which would qualify as unusual circumstances under Section State CEQA Guidelines Section 15300.2. Therefore, no unusual circumstances at the project site or related to project operations would result in a reasonable possibility of significant effects to the environment. This exception would not apply to the project.

4.3 Scenic Highways Criterion

State CEQA Guidelines Section 15300.2 states that a categorical exemption "shall not be used for a project which may result in damage to scenic resources, including but not limited to, trees, historic buildings, rock outcroppings, or similar resources, within a highway officially designated as a state scenic highway." There are no designated State Scenic Highways in the vicinity of the project site. The closest designated scenic highway is Highway 580, which has been officially designated as a State Scenic Highway, between Tracy and Oakland, approximately 7 miles south of the project site. Due to distance and intervening structures, the project site is not visible from the designated section of Highway 580. Therefore, the project would not damage scenic resources within a highway officially designated as a state scenic highway. This exception would not apply to the project.

4.4 Hazardous Waste Sites Criterion

State CEQA Guidelines Section 15300.2 states that a categorical exemption "shall not be used for a project located on a site which is included on any list compiled pursuant to Section 65962.5 of the Government Code." A search of the EnviroStor environmental database and the California Department of Toxic Substances Control Hazardous Waste and Substances Sites (Cortese) List was conducted in July 2021. The records review indicated that the project site is not located on a site included on a list compiled pursuant to Section 65962.5 of the Government Code (Department of Toxic Substances Control 2019). Therefore, this exception does not apply to the project.

4.5 Historic Resources Criterion

CEQA Guidelines Section 15300.2 states that a categorical exemption "shall not be used for a project which may cause a substantial adverse change in the significance of a historical resource." The Albany Bowl bowling alley and two one-story commercial structures adjacent to the bowling alley were constructed in 1949. As described in the *Project Description*, the project would involve demolition of the three existing buildings on the site. The Albany Bowl and two one-story commercial structures were evaluated for listing in the National Register of Historic Places (NHRP) and the California Register of Historical Resources (CRHR) by Rincon Consultants in September 2021. As noted in the Cultural Resources Study for the project, the Albany Bowl and two one-story commercial structures on the project site are recommended ineligible for listing in the NRHP, and CRHR (see Appendix D). As such, none of the three buildings qualify as a historical resource as defined by CEQA. However, the California Historical Resources Information System (CHRIS) records search identified two previously recorded resources within 0.25 mile of the project site, both prehistoric sites, one of which is adjacent to the project site. The adjacent site include bedrock milling features, shellfish remains, and stone tools. Due to its proximity, the project site is sensitive for cultural resources and there is the potential to uncover previously undiscovered archaeological resources during project construction ground disturbing activities.

The project would be required to be consistent with the City of Albany General Plan, including applicable General Plan policies that require the City to condition projects with the appropriate level of on-site monitoring during construction. Specifically, General Plan Action LU-5.B requires the City to maintain standard conditions of approval for new development which requires consultation with a professional archaeologist in the event that any archaeological materials are discovered during construction or preconstruction activities on a development site. This includes consultation with Native American organizations prior to continued site work in the event such materials are discovered. According to Action LU-6.G, the City may require properties that have been identified to have sensitive cultural resources to require preconstruction surveys and project-specific recommendations to protect significant archaeological resources. These polices thus require the City to condition projects with the appropriate level of on-site monitoring during work, which is a standard and ongoing City practice. Therefore, the following standard condition of approval would apply to the project:

> During construction, a qualified archaeologist and Native American monitor shall be present during all ground-disturbing activities. Archaeological monitoring shall be performed under the direction of an archaeologist meeting the Secretary of the Interior's Professional Qualifications Standards for prehistoric archaeology (National Park Service 1983). In the event subsurface archeological remains are discovered during any construction or preconstruction activities on the site, all land alteration work within 100 feet of the find shall be halted, the Community

Development Department notified, and the find evaluated for CRHR and NRHP eligibility. Site work in this area shall not occur until the archeologist has had an opportunity to evaluate the significance of the find and to outline appropriate mitigation measures, if deemed necessary. If prehistoric archeological deposits are discovered during development of the site, local Native American organizations shall be consulted and involved in making resource management decisions.

Because the structures on the project site are not eligible historic resources and the City's standard condition of approval for archaeological resources would apply during project construction, this exception is not applicable to the project.

5 Summary

Based on this analysis, the proposed 540 San Pablo Avenue Mixed-Use Project meets all criteria for a Class 32 Categorical Exemption pursuant to Section 15332 of the *CEQA Guidelines*.

6 References

AC Transit. 2020. El Cerrito Plaza Station Schedules and Fares. https://www.actransit.org/website/uploads/HSP_ECP-sched.pdf (Accessed August 2021)

Albany, City of. 2016. City of Albany 2035 General Plan. https://www.albanyca.org/departments/planning-zoning/albany-2035-general-plan (Accessed July 2021)

Bay Area Air Quality Management District (BAAQMD). 2017. https://www.baaqmd.gov/~/media/files/planning-and-research/ceqa/ceqa_guidelines_may2017-pdf.pdf?la=en (Accessed July 2021)

BAAQMD. 2016. Planning Healthy Places A Guidebook for Addressing Local Sources of Air Pollutants in Community Planning. https://www.baaqmd.gov/~/media/files/planning-and-research/planning-healthy-places/php_may20_2016-pdf.pdf?la=en (Accessed August 2021)

BAAQMD. 2016b. BAAQMD Air Toxics NSR Program Health Risk Assessment Guidelines. December. https://www.baaqmd.gov/~/media/files/planning-and-research/permit-modeling/hra_guidelines_12_7_2016_clean-pdf.pdf?la=en (Accessed August 2021)

BAAQMD. 2020. Diesel Free by '33 Why Replacing Diesel is a Public Health Priority Presentation. September. https://www.baaqmd.gov/~/media/dieselfree/workshops/090920/diesel_health_impacts_overview-pdf.pdf?la=en (Accessed February 2021)

California Air Resources Board. 2021. "Overview: Diesel Exhaust & Health." https://ww2.arb.ca.gov/resources/overview-diesel-exhaust-and-health (Accessed August 2021)

California Department of Transportation (Caltrans). 2013. Technical Noise Supplement to the Traffic Noise Analysis Protocol. (CT-HWANP-RT-13-069.25.2) September. http://www.dot.ca.gov/hq/env/noise/pub/TeNS_Sept_2013B.pdf (accessed September 2021).

_____. 2019*. Traffic Volumes.* Available at: https://dot.ca.gov/programs/traffic-operations/census. Accessed September 2021

_____. 2020. Transportation and Construction Vibration Guidance Manual (CT-HWANP-RT-20-365.01.01). April. https://dot.ca.gov/-/media/dot-media/programs/environmental-analysis/documents/env/tcvgm-apr2020-a11y.pdf (accessed September 2021).

City of Los Angeles. 2016. L.A. CEQA Thresholds Guide. https://planning.lacity.org/eir/CrossroadsHwd/deir/files/references/A07.pdf (Accessed July 2021)

Clean Water Program. 2012. Changes to Stormwater Quality Control Requirements. https://www.albanyca.org/home/showpublisheddocument/22069/636301026146770000 (Accessed July 2021)

Department of Toxic Substances Control. 2021. EnviroStor. https://www.envirostor.dtsc.ca.gov/public/search?cmd=search&reporttype=CORTESE&site_type=CSITES,FUDS&status=ACT,BKLG,COM&reporttitle=HAZARDOUS+WASTE+AND+SUBSTANCES+SITE+LIST+%28CORTESE%29 (Accessed July 2021)

East Bay Municipal Utility District (EBMUD). East Bay Municipal Utility District's Urban Water Management Plan 2020. https://www.ebmud.com/water/about-your-water/water-supply/urban-water-management-plan/ (Accessed July 2021)

Federal Highway Administration (FHWA). 2011. *Highway Traffic Noise: Analysis and Abatement Guidance.* December 2011. https://www.fhwa.dot.gov/environment/noise/regulations_and_guidance/analysis_and_abatement_guidance/revguidance.pdf (accessed September 2021).

Federal Transit Administration (FTA). 2018. Transit Noise and Vibration Impact Assessment Manual. https://www.transit.dot.gov/sites/fta.dot.gov/files/docs/research-innovation/118131/transit-noise-and-vibration-impact-assessment-manual-fta-report-no-0123_0.pdf (accessed September 2021).

Singer, B.C., W.W. Delp, D.R. Black, and I.S. Walker. 2016. Measured performance of filtration and ventilation systems for fine and ultrafine particles and ozone in an unoccupied modern California house. Indoor Air. LBNL-1006961. https://escholarship.org/content/qt7x86h6ff/qt7x86h6ff.pdf (Accessed August 2021)

Transportation Research Board. 2016. Highway Capacity Manual 6th Edition: A Guide for Multimodal Mobility Analysis. Washington, DC: The National Academies Press. https://doi.org/10.17226/24798 (accessed September 2021)

United States Environmental Protection Agency. 2011. *Chapter 16. Activity Factors*, Exposure Factors Handbook: 2011 Edition. October. https://www.epa.gov/expobox/about-exposure-factors-handbook (Accessed August 2021)

U.S. Fish and Wildlife Services (FWS). 2021. National Wetlands Inventory. https://www.fws.gov/wetlands/data/mapper.html (Accessed July 2021)

This page intentionally left blank.

Appendix A

Project Site Plans

VICINITY MAP

N.T.S.

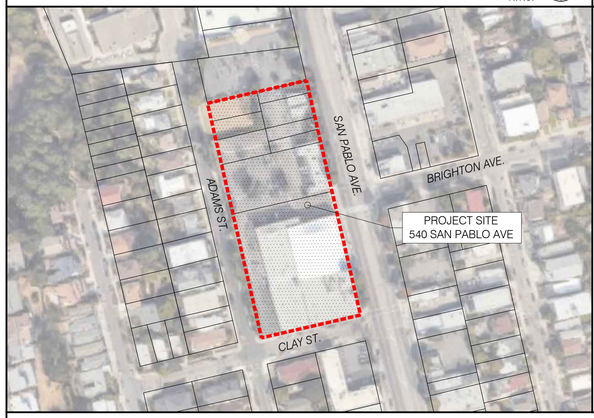

PROJECT DIRECTORY

OWNER/APPLICANT:
R&S Realty, LLC
2025 Fourth Street
Berkeley, CA 94710

ARCHITECT:
David Trachtenberg, Principal
TRACHTENBERG ARCHITECTS
2421 Fourth Street
Berkeley, CA 94710
510.649.1414
www.TrachtenbergArch.com

PROJECT DESCRIPTION

PROJECT ADDRESS: 540 San Pablo Avenue, Albany, CA 94706

(APN: 66-2797-2-3, 66-2797-4, 66-2797-5, 66-2797-6, 66-2797-7-2, 66-2797-9-2, 66-2797-23, 66-2797-24, 66-2797-25)

SCOPE OF WORK:

PROPOSED DEMOLITION OF THE EXISTING COMMERCIAL BUILDINGS ON SITE TO CONSTRUCT A NEW MIXED-USE PROJECT WITH 207 DWELLING UNITS, GROUND LEVEL COMMERCIAL SPACES AND LOBBIES, AND PARKING (COVERED AND UNCOVERED), UTILIZING THE STATE OF CALIFORNIA DENSITY BONUS.

ZONING CODE SUMMARY

(BASED ON THE ALBANY MUNICIPAL ZONING CODE)

ZONING: SPC

SEE SHEET A0.1 FOR COMPLETE ZONING CODE DATA

DRAWING LIST

VIEW ALONG SAN PABLO LOOKING SOUTH-WEST

TRACHTENBERG ARCHITECTS

2421 Fourth Street
Berkeley, California 94710
510.649.1414
www.TrachtenbergArch.com

ALBANY MIXED-USE

540 San Pablo Ave.
Albany, CA 94706

01.14.2021 STUDY SESSION
03.01.2021 STUDY SESSION REVISIONS
06.11.2021 ZONING SUBMITTAL
07.28.2021 ZONING REVISIONS
09.20.2021 PLANNING COMMISSION

JOB: 2026

SHEET:

GENERAL INFORMATION

A0.0

Table 2B. Site Regulations by District: Nonresidential (20.24.020)

Standard	Zoning District				
	SC	SPC	CMX	WF[1]	PF[1]
Maximum Density (dwelling units/acre where residential development is proposed)	20 unit minimum 63	20 unit minimum 63	N/A	N/A	N/A
Maximum FAR (floor area/lot area ratio)					
Mixed-use development (more than 1 use, including residential and commercial or other permitted nonresidential uses)	1.25	2.25	0.5	0.5	N/A
Commercial portion of any development (not to be exceeded, regardless of mix with other uses, or any bonus increase in the total FAR of development)	1.25	0.95	0.5	0.5	N/A
Multifamily dwelling, where it is the sole use of a site	1.25	N/A	N/A	N/A	N/A
Live/work space	N/A	N/A	[4]	N/A	N/A
Minimum Lot Area per Dwelling Unit (square feet)	N/A	N/A	[2]	N/A	N/A
Minimum Lot Size (square feet)	None	None	5,000		None
Minimum Lot Width (feet)	None	None	50		None
Maximum Lot Coverage (% of lot area)	100%	100%	80%		

Table 2B. Site Regulations by District: Nonresidential (20.24.020)

Standard	Zoning District				
	SC	SPC	CMX	WF[1]	PF[1]
Maximum Building Height (feet)	35	38/20/12[6]	45		40
Minimum Yard Setbacks (feet)					
Front, or exterior side	[6][7]	[6][7]	None	[5]	
Side, interior	[8]	[8]	[9]		
Rear	[8][10]	[8][10]	[9]		
Maximum Fence Height	See Subsection 20.24.110				
Minimum Usable Open Space (multifamily dwellings)	See Subsection 20.24.090				

3 - BASE ZONING STANDARDS

PROJECT DATA

	BASE ZONING	ALLOWABLE W/ DENSITY BONUS	PROPOSED 50% DENSITY BONUS	COMPLIANCE
ZONING	SPC			N/A
ZONING OVERLAY	PLANNED RESIDENTIAL/ COMMERCIAL OVERLAY			N/A
ALLOWABLE CONCESSIONS	**N/A**	**3**	**1**	N/A
SITE AREA (SQ. FT.)	95,156	95,156	95,156	N/A
SITE AREA (ACRES)	2.18	2.18	2.18	N/A
DENSITY	63	95	95	COMPLIES
ALLOWABLE UNITS	138	207	207	COMPLIES
FAR	2.25	3.375	2.96	DB WAIVER
ALLOWABLE GSF	214,101	321,152	281,482	N/A
REMAINING UNUTILIZED GSF	**N/A**	**N/A**	**39,670**	COMPLIES
COMMERCIAL PORTION OF FAR	0.95 MAX	N/A	0.06	COMPLIES
COMMERCIAL AREA	90,398	N/A	5,725	COMPLIES
LOT COVERAGE	100%	100%	66%	COMPLIES
SETBACKS				
SAN PABLO	0'	0'	0'	COMPLIES
CLAY	0'	0'	8'	COMPLIES
ADAMS	15'	15'	16'-9"	COMPLIES
NORTH	0'	0'	7'	COMPLIES
PARKING SETBACK AT ADAMS	10'	10'	10'	COMPLIES
PORCH/STAIR PROJECTIONS AT YARDS	6'	6'	6'	COMPLIES
SOLAR PLANE AT ADAMS				DB WAIVER
HEIGHT BUILDING A (TO NATURAL GRADE)	38' (4-STORIES)	69' (6-STORIES)	69' (6-STORIES)	DB WAIVER
HEIGHT BUILDING B (TO NATURAL GRADE)	38' (4-STORIES)	71' (6-STORIES)	71' (6-STORIES)	DB WAIVER
OPEN SPACE (SEE TABLE ON A0.1B)	N/A	41,400	21,170	CONCESSION
PARKING (SEE TABLE)	N/A	114	178	COMPLIES

BUILDING A

	FLOOR AREA	GARAGE	CONST. SF	STUDIO	LOFT	1-BR	2-BR	3-BR	3-BR TH	TOTAL
LEVEL 6	18,888		18,888	2		11	6			19
LEVEL 5	25,117		25,117	2		14	9	1		26
LEVEL 4	25,117		25,117	2		14	9	1		26
LEVEL 3	25,117		25,117	2		14	8	1		25
LEVEL 2	24,649		24,649	2		14	8	1		25
LEVEL 1	11,573	22,568	34,141							0
TOTAL	130,461	22,568	153,029	10	0	67	40	4	0	121

BUILDING B

	FLOOR AREA	GARAGE	CONST. SF	STUDIO	LOFT	1-BR	2-BR	3-BR	3-BR TH	TOTAL
LEVEL 6	16,631		16,631	2	2	2	8	1		15
LEVEL 5	17,421		17,421	2	2	2	8	2		16
LEVEL 4	17,421		17,421	2	2	2	8	2		16
LEVEL 3	17,421		17,421	2	2	1	8	2		15
LEVEL 2	17,233		17,233	2	2	1	8	2		15
LEVEL 1	8,807	13,323	22,130							0
TOTAL	94,934	13,323	108,257	10	10	8	40	9	0	77

TOWNHOUSES

	FLOOR AREA	GARAGE	CONST. SF	STUDIO	LOFT	1-BR	2-BR	3-BR	3-BR TH	TOTAL
LEVEL 3	6,732		6,732							0
LEVEL 2	6,732		6,732							0
LEVEL 1	2,862	3,870	6,732						9	9
TOTAL	16,326	3,870	20,196	0	0	0	0	0	9	9

TOTAL PROJECT

	FLOOR AREA	GARAGE	CONST. SF	STUDIO	LOFT	1-BR	2-BR	3-BR	3-BR TH	TOTAL
TOTAL UNITS	241,721	39,761	281,482	20	10	75	80	13	9	**207**
FAR	**2.96**		UNIT MIX	9.7%	4.8%	36.2%	38.6%	6.3%	4.3%	100%

AFFORDABLE HOUSING

TOTAL FAMILY UNITS: 49.3%

				STUDIO	LOFT	1-BR	2-BR	3-BR	3-BR TH	TOTAL
DENSITY BONUS (15% X BASE ALLOWABLE UNITS)				2	1	8	8	1	1	**21**
			UNIT MIX	10%	5%	38%	38%	5%	5%	100%
SEE STATE DENSITY BONUS TABLE & CITY OF ALBANY INCLUSIONARY HOUSING REQ. TABLE FOR MORE DETAIL										

PARKING

	DENSITY BONUS REQUIREMENT			PROVIDED				
	UNITS OR SF	RATIO PER	ZONING REQ.	PROVIDED	INDOOR	OUTDOOR	TH	RATIO
BUILDING A	121	0.5	61	**81**	80	1		**0.67**
BUILDING B	77	0.5	39	**55**	54	1		**0.71**
TOWNHOUSES	9	0.5	5	**18**			18	**2.00**
COMMERCIAL PARKING	3,725	1/400	9	**24**		24		**6.44**
TOTAL			114	**178**	134	26	18	

BICYCLE PARKING

	REQUIRED			PROVIDED				
	UNITS OR SF	RATIO PER	ZONING REQ.	PROVIDED	BLDG A	BLDG B	OUTDOOR	TH
RESIDENTIAL	207	1.0	207	**270**	141	93	0	36
COMMERCIAL	5,725	1/1500	4	**12**	0		12	0
TOTAL			211	**282**	141	93	12	36
			CARGO BIKES	37	21	7		9

1 - ZONING INFORMATION

STATE DENSITY BONUS TABLE

Base # Units	% VLI units	# VLI Units	#VLI Units	Bonus %	# DB Units	# DB Units	Maximum DB Project
Max. Residential Density/Site Area (rounds up)	VLI = Very Low Income <50 AMI	% VLI x Base # Units			%Bonus x Base # Units	%Bonus x Base # Units (rounded up)	%Bonus x Base # Units (rounded up)
138	**15%**	20.70	21.00	50.0%	69.00	69	207

DENSITY BONUS MATRIX

Base Project # Units	# VLI	% VLI	% DB	Total Units with DB	# of Allowable Concessions
138	7	5%	20.0%	166	1
138	9	6%	22.5%	170	1
138	10	7%	25.0%	173	1
138	12	8%	27.5%	176	1
138	13	9%	30.0%	180	1
138	14	10%	32.5%	183	2
138	16	11%	35.0%	187	2
138	17	12%	38.8%	192	2
138	18	13%	42.5%	197	2
138	20	14%	46.3%	202	2
138	21	15%	50.0%	207	3

CITY OF ALBANY INCLUSIONARY HOUSING REQUIREMENT TABLE

(Does not include Density Bonus Units)

Base # New Units	Inclusionary %	Total Inclusionary Units Req.	Total Inclusionary Units Req.	#VLI Units	#LI Units	Total Inclusionary Units Provided
See Above	Per AMC	ounds Up at .5)	(From State DB Table)			
138	15%	20.7	21	21	0	21

4 - DENSITY BONUS & AFFORDABLE HOUSING

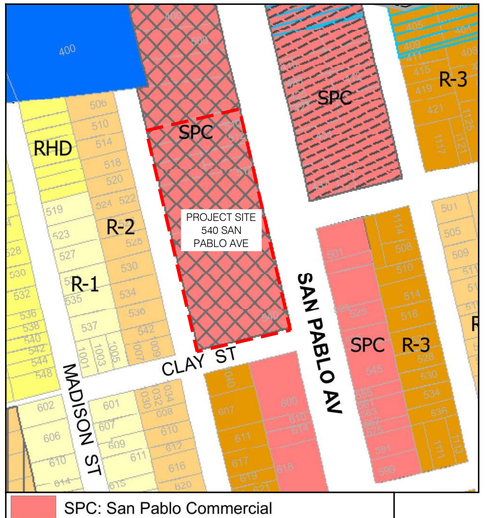

SPC: San Pablo Commercial

Planned Residential/Commercial Overlay District

2 - ZONING MAP

TRACHTENBERG ARCHITECTS

2421 Fourth Street
Berkeley, California 94710
510.649.1414
www.TrachtenbergArch.com

ALBANY MIXED-USE

540 San Pablo Ave.
Albany, CA 94706

01.14.2021 STUDY SESSION
03.01.2021 STUDY SESSION REVISIONS
06.11.2021 ZONING SUBMITTAL
07.28.2021 ZONING REVISIONS
09.20.2021 PLANNING COMMISSION

JOB: 2026

SHEET:

ZONING INFORMATION

A0.1A

OPEN SPACE

	ZONING REQUIREMENT		
	UNITS	RATIO	TOTAL REQ
UNITS	207	200	41,400
TOTAL PROVIDED (W/ CONCESSION)		102	21,170
	SQ. FT.	**RATIO**	**TOTAL**
COMMON AREA			
PLAZA A	600	1	600
PLAZA B	600	1	600
PARK ON ADAMS	1,848	1	1,848
BUILDING A PODIUM	5,505	1	5,505
BUILDING B PODIUM	3,581	1	3,581
BUILDING A ROOF DECK	718	1	718
BUILDING B ROOF DECK	718	1	718
PRIVATE PATIOS (MAX 100 SF PER UNIT)			
BUILDING A (20X100)	2,000	2	4,000
BUILDING B (9X100)	900	2	1,800
TOWNHOUSES (9X100)	900	2	1,800

PUBLICLY ACCESSIBLE SITE AMENITIES

PARK ON ADAMS	1,848
CAFÉ PLAZA	600
FOUNTAIN PLAZA	600
DOG WALK AREA ON ADAMS	1,645
PED. CONNECTIONS TO ADAMS	4,000
CLAY SIDEWALK WIDENING	1,600
SAN PABLO SIDEWALK WIDENING	730
TOTAL	**11,023**

OPEN SPACE TABLE

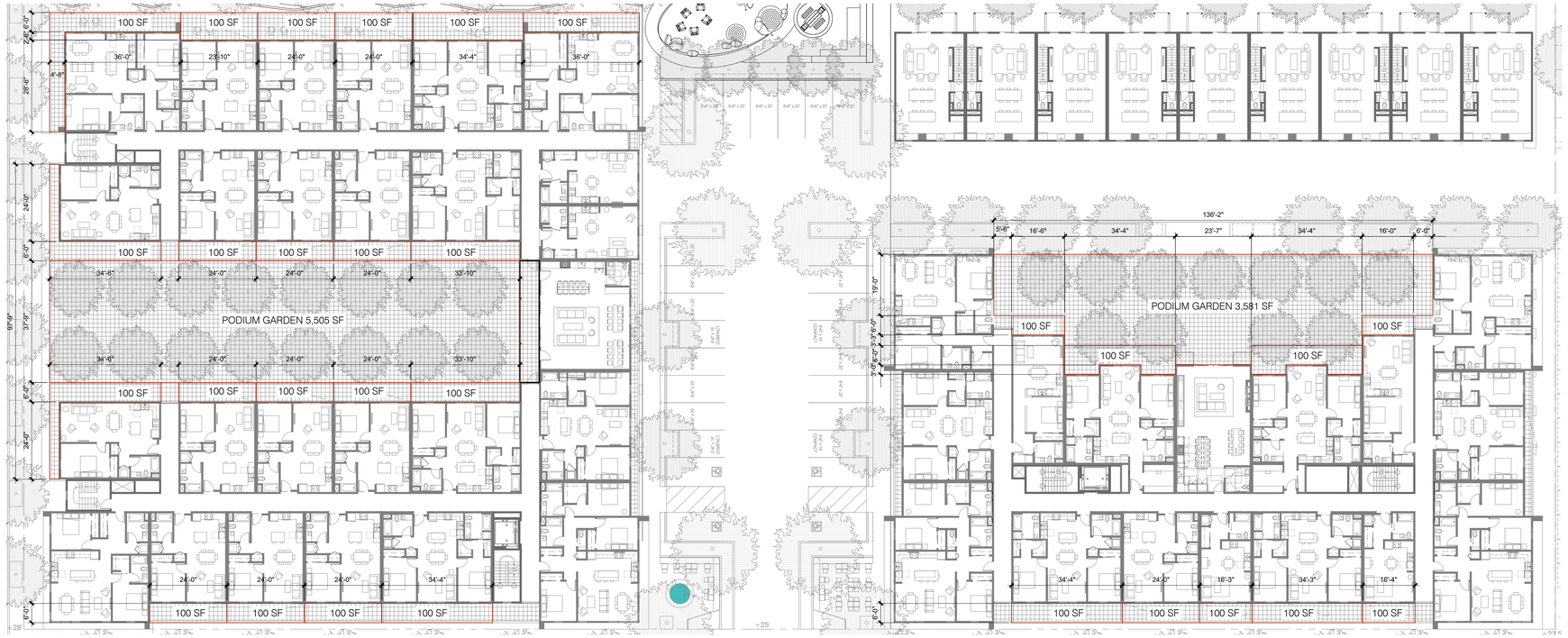

PODIUM LEVEL PLAN

BUILDING B ROOF DECK

BUILDING A ROOF DECK

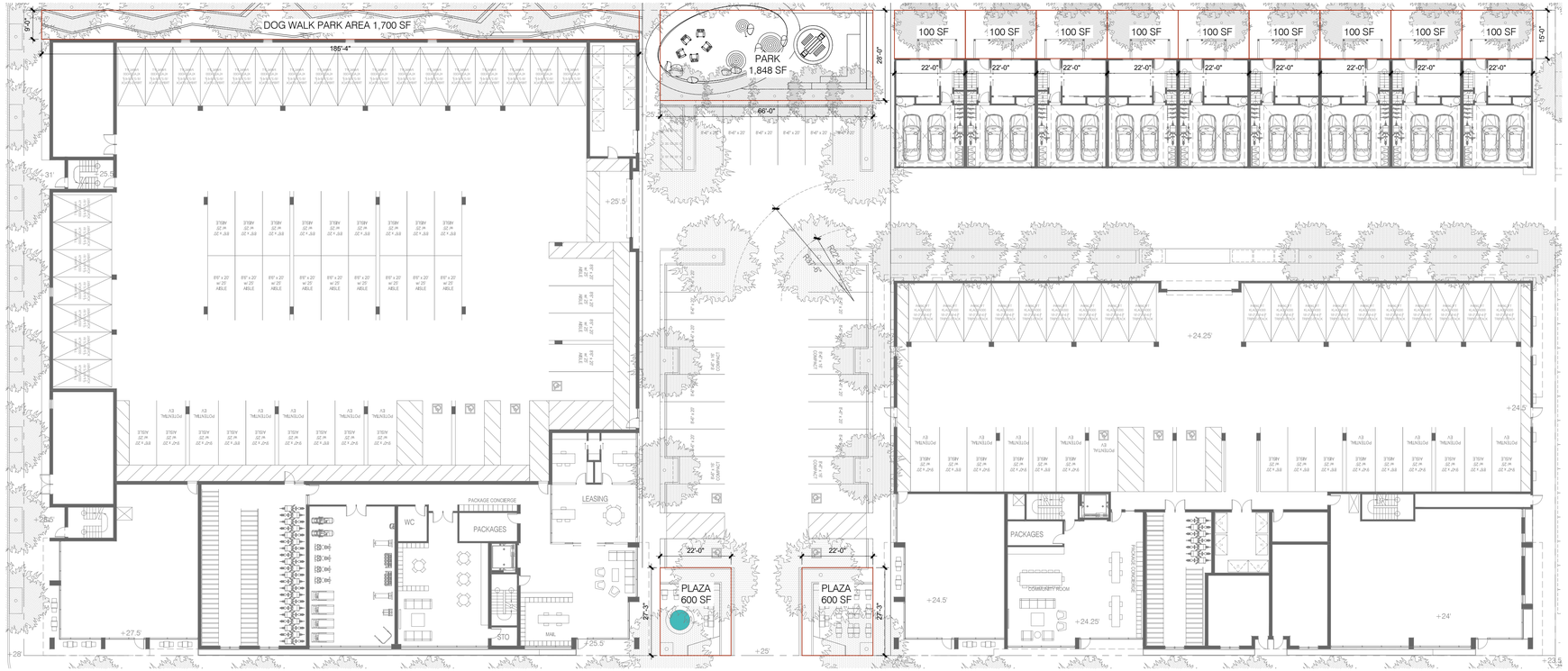

GROUND LEVEL PLAN

TRACHTENBERG ARCHITECTS

2421 Fourth Street
Berkeley, California 94710
510.649.1414
www.TrachtenbergArch.com

ALBANY MIXED-USE

540 San Pablo Ave.
Albany, CA 94706

01.14.2021 STUDY SESSION
03.01.2021 STUDY SESSION REVISIONS
06.11.2021 ZONING SUBMITTAL
07.28.2021 ZONING REVISIONS
09.20.2021 PLANNING COMMISSION

JOB: 2026

SHEET:

OPEN SPACE DIAGRAMS

A0.1B

1 GROUND LEVEL PLAN
1"=40'-0" @ 11x17 1"=20'-0" @ 24x36

N

TRACHTENBERG ARCHITECTS

2421 Fourth Street
Berkeley, California 94710
510.649.1414
www.TrachtenbergArch.com

ALBANY MIXED-USE

540 San Pablo Ave.
Albany, CA 94706

01.14.2021 STUDY SESSION
03.01.2021 STUDY SESSION REVISIONS
06.11.2021 ZONING SUBMITTAL
07.28.2021 ZONING REVISIONS
09.20.2021 PLANNING COMMISSION

JOB: 2026

SHEET:

GROUND LEVEL PLAN

A2.1

1 - PLAN AT LEVEL 2 PODIUM

1"=40'-0" @ 11x17 1"=20'-0" @ 24x36

N

TRACHTENBERG ARCHITECTS

2421 Fourth Street
Berkeley, California 94710
510.649.1414
www.TrachtenbergArch.com

ALBANY MIXED-USE

540 San Pablo Ave.
Albany, CA 94706

01.14.2021 STUDY SESSION
03.01.2021 STUDY SESSION REVISIONS
06.11.2021 ZONING SUBMITTAL
07.28.2021 ZONING REVISIONS
09.20.2021 PLANNING COMMISSION

JOB: 2026

SHEET:

PLAN AT LEVEL 2

A2.2

1
-
PLAN AT TYPICAL RESIDIENTIAL LEVELS 3, 4 & 5
1"=40'-0" @ 11x17 1"=20'-0" @ 24x36

N

TRACHTENBERG
ARCHITECTS

2421 Fourth Street
Berkeley, California 94710
510.649.1414
www.TrachtenbergArch.com

ALBANY MIXED-USE

540 San Pablo Ave.
Albany, CA 94706

01.14.2021 STUDY SESSION
03.01.2021 STUDY SESSION REVISIONS
06.11.2021 ZONING SUBMITTAL
07.28.2021 ZONING REVISIONS
09.20.2021 PLANNING COMMISSION

JOB: 2026

SHEET:

PLAN AT
LEVELS 3-5

A2.3

1
-

PLAN AT LEVEL 6

1"=40'-0" @ 11x17 1"=20'-0" @ 24x36

N

TRACHTENBERG
ARCHITECTS

2421 Fourth Street
Berkeley, California 94710
510.649.1414
www.TrachtenbergArch.com

ALBANY MIXED-USE

540 San Pablo Ave.
Albany, CA 94706

01.14.2021 STUDY SESSION
03.01.2021 STUDY SESSION REVISIONS
06.11.2021 ZONING SUBMITTAL
07.28.2021 ZONING REVISIONS
09.20.2021 PLANNING COMMISSION

JOB: 2026

SHEET:

PLAN AT
LEVEL 6

A2.4

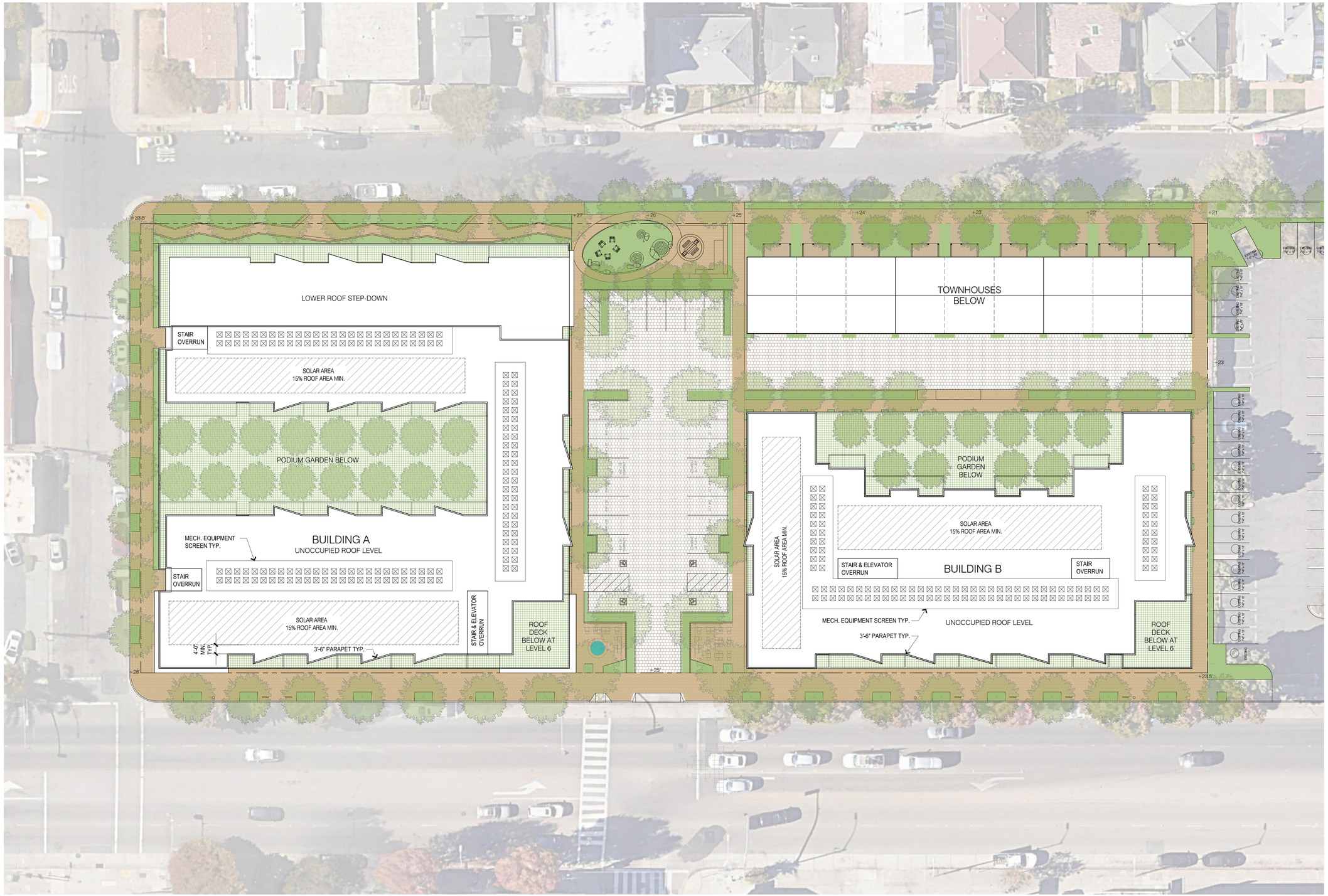

1 - PLAN AT ROOF

1"=40'-0" @ 11x17 1"=20'-0" @ 24x36

N

TRACHTENBERG ARCHITECTS

2421 Fourth Street
Berkeley, California 94710
510.649.1414
www.TrachtenbergArch.com

ALBANY MIXED-USE

540 San Pablo Ave.
Albany, CA 94706

01.14.2021 STUDY SESSION
03.01.2021 STUDY SESSION REVISIONS
06.11.2021 ZONING SUBMITTAL
07.28.2021 ZONING REVISIONS
09.20.2021 PLANNING COMMISSION

JOB: 2026

SHEET:

PLAN AT ROOF

A2.5

TRACHTENBERG
ARCHITECTS

2421 Fourth Street
Berkeley, California 94710
510.649.1414
www.TrachtenbergArch.com

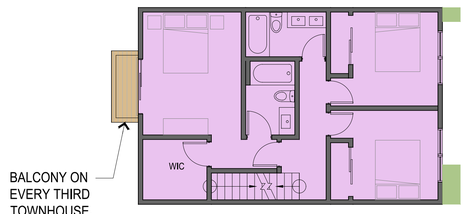

BALCONY ON EVERY THIRD TOWNHOUSE, SEE ELEV.

LEVEL 3:

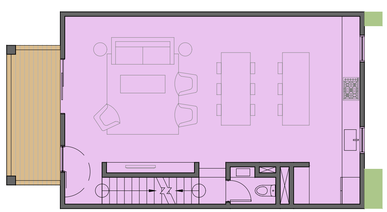

LEVEL 2:

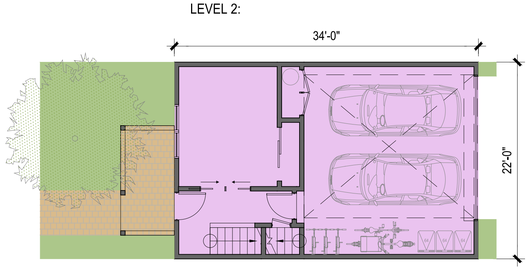

GROUND LEVEL

3-BR TOWNHOUSE

	LIVING AREA	GARAGE	TOTAL
LEVEL 3	748		748
LEVEL 2	748		748
LEVEL 1	318	430	748
TOTAL	**1814**	430	2244

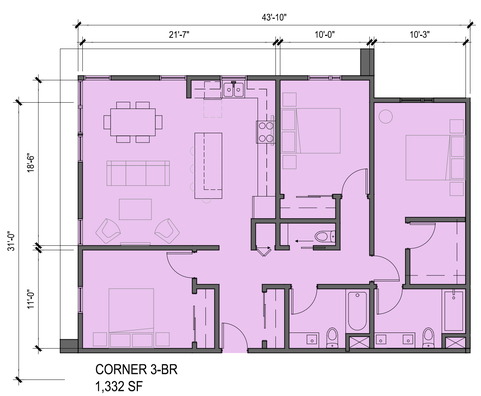

CORNER 3-BR
1,332 SF

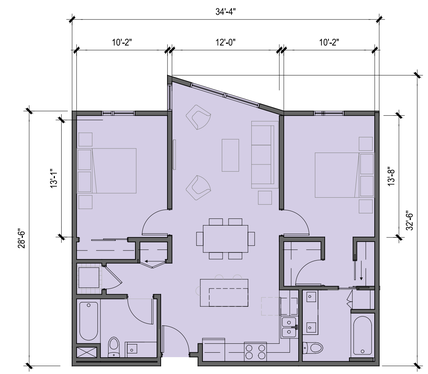

INLINE 2-BR
1,000 SF

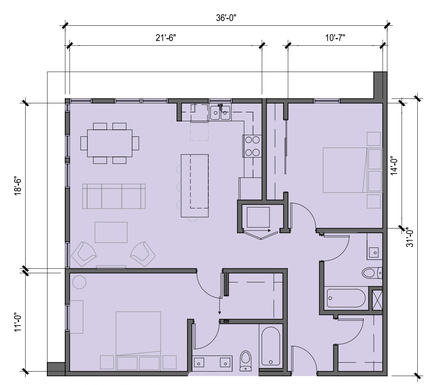

CORNER 2-BR
1,116 SF

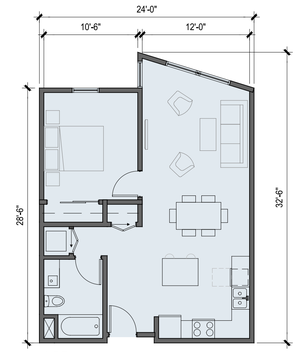

1-BR
706 SF

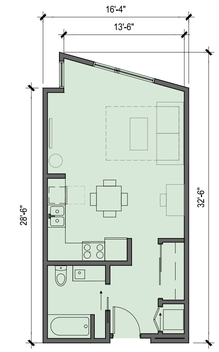

STUDIO
490 SF

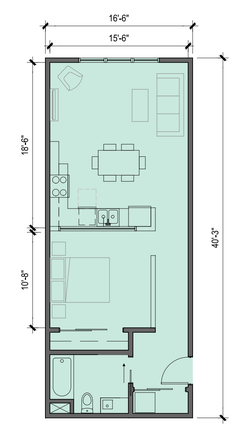

LOFT
662 SF

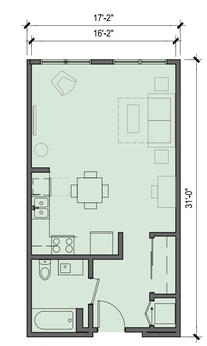

STUDIO
527 SF

1 - UNIT PLANS
1/16"=1'-0" @ 11x17 1/8"=1'-0" @ 24x36

ALBANY MIXED-USE

540 San Pablo Ave.
Albany, CA 94706

01.14.2021 STUDY SESSION
03.01.2021 STUDY SESSION REVISIONS
06.11.2021 ZONING SUBMITTAL
07.28.2021 ZONING REVISIONS
09.20.2021 PLANNING COMMISSION

JOB: 2026

SHEET:

TYPICAL RESIDENTIAL UNIT PLANS

A2.6

2
-

NORTH ELEVATION

1"=40'-0" @ 11x17 1"=20'-0" @ 24x36

1
-

SAN PABLO ELEVATION

1"=40'-0" @ 11x17 1"=20'-0" @ 24x36

TRACHTENBERG
ARCHITECTS

2421 Fourth Street
Berkeley, California 94710
510.649.1414
www.TrachtenbergArch.com

ALBANY MIXED-USE

540 San Pablo Ave.
Albany, CA 94706

01.14.2021 STUDY SESSION
03.01.2021 STUDY SESSION REVISIONS
06.11.2021 ZONING SUBMITTAL
07.28.2021 ZONING REVISIONS
09.20.2021 PLANNING COMMISSION

JOB: 2026

SHEET:

ELEVATIONS

A3.1

2
-

CLAY ELEVATION

1"=40'-0" @ 11x17 1"=20'-0" @ 24x36

1
-

ADAMS ELEVATION

1"=40'-0" @ 11x17 1"=20'-0" @ 24x36

TRACHTENBERG
ARCHITECTS

2421 Fourth Street
Berkeley, California 94710
510.649.1414
www.TrachtenbergArch.com

ALBANY MIXED-USE

540 San Pablo Ave.
Albany, CA 94706

01.14.2021 STUDY SESSION
03.01.2021 STUDY SESSION REVISIONS
06.11.2021 ZONING SUBMITTAL
07.28.2021 ZONING REVISIONS
09.20.2021 PLANNING COMMISSION

JOB: 2026

SHEET:

ELEVATIONS
PLANS

A3.2

3
-

CLAY STREET STRIP ELEVATION

1/64"=1'-0" @ 11x17 1/32"=1'-0" @ 24x36

2
-

ADAMS STREET STRIP

1/64"=1'-0" @ 11x17 1/32"=1'-0" @ 24x36

1
-

SAN PABLO STREET STRIP

1/64"=1'-0" @ 11x17 1/32"=1'-0" @ 24x36

TRACHTENBERG
ARCHITECTS

2421 Fourth Street
Berkeley, California 94710
510.649.1414
www.TrachtenbergArch.com

ALBANY MIXED-USE

540 San Pablo Ave.
Albany, CA 94706

01.14.2021 STUDY SESSION
03.01.2021 STUDY SESSION REVISIONS
06.11.2021 ZONING SUBMITTAL
07.28.2021 ZONING REVISIONS
09.20.2021 PLANNING COMMISSION

JOB: 2026

SHEET:

STREET STRIP
ELEVATIONS

A3.3

Appendix B

Noise

Short-Term Noise Measurement 1 - San Pablo Avenue

Data Logger 2		
Duration (seconds)		3
Weighting	A	
Response	SLOW	
Range	40-100	
L05		74.3
L10		73.2
L50		68.2
L90		58.8
L95		56.4
Lmax		83.9
Time	8/10/2021	9:22
SEL		99.5
Leq		**69.9**

No.s	Date Time	Time	dB	Sound Energy
1	8/10/2021 9:21	9:21 AM	70.7	35246926.65
2	8/10/2021 9:21	9:21 AM	73.2	62678883.93
3	8/10/2021 9:21	9:21 AM	70.9	36908063.12
4	8/10/2021 9:21	9:21 AM	69.3	25534141.15
5	8/10/2021 9:21	9:21 AM	69.4	26128907.7
6	8/10/2021 9:21	9:21 AM	71.1	38647486.55
7	8/10/2021 9:21	9:21 AM	73.9	73641267.47
8	8/10/2021 9:21	9:21 AM	73.9	73641267.47
9	8/10/2021 9:21	9:21 AM	72.4	52134024.86
10	8/10/2021 9:21	9:21 AM	72	47546795.77
11	8/10/2021 9:21	9:21 AM	73.2	62678883.93
12	8/10/2021 9:21	9:21 AM	71.7	44373251.65
13	8/10/2021 9:21	9:21 AM	71.8	45406837.45
14	8/10/2021 9:22	9:22 AM	73.2	62678883.93
15	8/10/2021 9:22	9:22 AM	75.1	97078097.08
16	8/10/2021 9:22	9:22 AM	67.8	18076787.58
17	8/10/2021 9:22	9:22 AM	68.7	22239307.24
18	8/10/2021 9:22	9:22 AM	67.5	16870239.76
19	8/10/2021 9:22	9:22 AM	67	15035617.01
20	8/10/2021 9:22	9:22 AM	78.4	207549291.3
21	8/10/2021 9:22	9:22 AM	68.7	22239307.24
22	8/10/2021 9:22	9:22 AM	67.5	16870239.76
23	8/10/2021 9:22	9:22 AM	69.9	29317116.63
24	8/10/2021 9:22	9:22 AM	66.9	14693364.58
25	8/10/2021 9:22	9:22 AM	63.7	7032686.446
26	8/10/2021 9:22	9:22 AM	60.5	3366055.363
27	8/10/2021 9:22	9:22 AM	57.6	1726319.812
28	8/10/2021 9:22	9:22 AM	59.9	2931711.663

29	8/10/2021 9:22	9:22 AM	64.4	8262686.11
30	8/10/2021 9:22	9:22 AM	63.6	6872602.958
31	8/10/2021 9:22	9:22 AM	65.6	10892341.64
32	8/10/2021 9:22	9:22 AM	57.5	1687023.976
33	8/10/2021 9:22	9:22 AM	52.9	584953.3799
34	8/10/2021 9:23	9:23 AM	53.4	656328.4872
35	8/10/2021 9:23	9:23 AM	53.3	641388.6269
36	8/10/2021 9:23	9:23 AM	55.6	1089234.164
37	8/10/2021 9:23	9:23 AM	60.3	3214557.916
38	8/10/2021 9:23	9:23 AM	67.9	18497850.06
39	8/10/2021 9:23	9:23 AM	60.5	3366055.363
40	8/10/2021 9:23	9:23 AM	53.7	703268.6446
41	8/10/2021 9:23	9:23 AM	51.7	443732.5165
42	8/10/2021 9:23	9:23 AM	53.6	687260.2958
43	8/10/2021 9:23	9:23 AM	58.4	2075492.913
44	8/10/2021 9:23	9:23 AM	65.2	9933933.644
45	8/10/2021 9:23	9:23 AM	74.6	86520945.09
46	8/10/2021 9:23	9:23 AM	71.4	41411527.94
47	8/10/2021 9:23	9:23 AM	70.9	36908063.12
48	8/10/2021 9:23	9:23 AM	70.5	33660553.63
49	8/10/2021 9:23	9:23 AM	72.5	53348382.3
50	8/10/2021 9:23	9:23 AM	73.7	70326864.46
51	8/10/2021 9:23	9:23 AM	73.7	70326864.46
52	8/10/2021 9:23	9:23 AM	70.4	32894345.88
53	8/10/2021 9:23	9:23 AM	65.7	11146056.87
54	8/10/2021 9:24	9:24 AM	66.6	13712645.69
55	8/10/2021 9:24	9:24 AM	76.4	130954749.7
56	8/10/2021 9:24	9:24 AM	69.5	26737528.14
57	8/10/2021 9:24	9:24 AM	69.6	27360325.18
58	8/10/2021 9:24	9:24 AM	70.3	32145579.16
59	8/10/2021 9:24	9:24 AM	73.2	62678883.93
60	8/10/2021 9:24	9:24 AM	70	30000000
61	8/10/2021 9:24	9:24 AM	66	11943215.12
62	8/10/2021 9:24	9:24 AM	68.5	21238373.53
63	8/10/2021 9:24	9:24 AM	72.7	55862614.1
64	8/10/2021 9:24	9:24 AM	67.6	17263198.12
65	8/10/2021 9:24	9:24 AM	64.4	8262686.11
66	8/10/2021 9:24	9:24 AM	71.3	40468886.48
67	8/10/2021 9:24	9:24 AM	64.9	9270886.298
68	8/10/2021 9:24	9:24 AM	63.2	6267888.393
69	8/10/2021 9:24	9:24 AM	60.3	3214557.916
70	8/10/2021 9:24	9:24 AM	69	23829847.04
71	8/10/2021 9:24	9:24 AM	63.2	6267888.393
72	8/10/2021 9:24	9:24 AM	66.7	14032054.24
73	8/10/2021 9:24	9:24 AM	67.9	18497850.06
74	8/10/2021 9:25	9:25 AM	65	9486832.981
75	8/10/2021 9:25	9:25 AM	66.3	12797385.56

76	8/10/2021 9:25	9:25 AM	65.7	11146056.87
77	8/10/2021 9:25	9:25 AM	65.8	11405681.89
78	8/10/2021 9:25	9:25 AM	67.7	17665309.66
79	8/10/2021 9:25	9:25 AM	64.7	8853627.68
80	8/10/2021 9:25	9:25 AM	62.6	5459102.576
81	8/10/2021 9:25	9:25 AM	69.4	26128907.7
82	8/10/2021 9:25	9:25 AM	71.4	41411527.94
83	8/10/2021 9:25	9:25 AM	69.9	29317116.63
84	8/10/2021 9:25	9:25 AM	74.6	86520945.09
85	8/10/2021 9:25	9:25 AM	73.2	62678883.93
86	8/10/2021 9:25	9:25 AM	73.6	68726029.58
87	8/10/2021 9:25	9:25 AM	73.2	62678883.93
88	8/10/2021 9:25	9:25 AM	71	37767762.35
89	8/10/2021 9:25	9:25 AM	70.4	32894345.88
90	8/10/2021 9:25	9:25 AM	69	23829847.04
91	8/10/2021 9:25	9:25 AM	64.2	7890803.976
92	8/10/2021 9:25	9:25 AM	61	3776776.235
93	8/10/2021 9:25	9:25 AM	58.9	2328741.35
94	8/10/2021 9:26	9:26 AM	57.9	1849785.006
95	8/10/2021 9:26	9:26 AM	59.8	2864977.758
96	8/10/2021 9:26	9:26 AM	61	3776776.235
97	8/10/2021 9:26	9:26 AM	61	3776776.235
98	8/10/2021 9:26	9:26 AM	68.6	21733078.8
99	8/10/2021 9:26	9:26 AM	66.8	14358902.77
100	8/10/2021 9:26	9:26 AM	68.5	21238373.53
101	8/10/2021 9:26	9:26 AM	67.8	18076787.58
102	8/10/2021 9:26	9:26 AM	69.4	26128907.7
103	8/10/2021 9:26	9:26 AM	70.2	31413856.44
104	8/10/2021 9:26	9:26 AM	69	23829847.04
105	8/10/2021 9:26	9:26 AM	68.5	21238373.53
106	8/10/2021 9:26	9:26 AM	67	15035617.01
107	8/10/2021 9:26	9:26 AM	69.6	27360325.18
108	8/10/2021 9:26	9:26 AM	68	18928720.33
109	8/10/2021 9:26	9:26 AM	66.4	13095474.97
110	8/10/2021 9:26	9:26 AM	68.3	20282489.26
111	8/10/2021 9:26	9:26 AM	66	11943215.12
112	8/10/2021 9:26	9:26 AM	67.6	17263198.12
113	8/10/2021 9:26	9:26 AM	67	15035617.01
114	8/10/2021 9:27	9:27 AM	64.2	7890803.976
115	8/10/2021 9:27	9:27 AM	69.4	26128907.7
116	8/10/2021 9:27	9:27 AM	68.9	23287413.5
117	8/10/2021 9:27	9:27 AM	67.9	18497850.06
118	8/10/2021 9:27	9:27 AM	66.7	14032054.24
119	8/10/2021 9:27	9:27 AM	65.9	11671354.35
120	8/10/2021 9:27	9:27 AM	69.3	25534141.15
121	8/10/2021 9:27	9:27 AM	69.4	26128907.7
122	8/10/2021 9:27	9:27 AM	69.1	24384915.48

123	8/10/2021 9:27	9:27 AM	69.6	27360325.18
124	8/10/2021 9:27	9:27 AM	77.3	161109538.9
125	8/10/2021 9:27	9:27 AM	72.5	53348382.3
126	8/10/2021 9:27	9:27 AM	71	37767762.35
127	8/10/2021 9:27	9:27 AM	70.4	32894345.88
128	8/10/2021 9:27	9:27 AM	70.5	33660553.63
129	8/10/2021 9:27	9:27 AM	66.1	12221408.33
130	8/10/2021 9:27	9:27 AM	59.9	2931711.663
131	8/10/2021 9:27	9:27 AM	56.4	1309547.497
132	8/10/2021 9:27	9:27 AM	58.1	1936962.687
133	8/10/2021 9:27	9:27 AM	62.9	5849533.799
134	8/10/2021 9:28	9:28 AM	66.8	14358902.77
135	8/10/2021 9:28	9:28 AM	59.3	2553414.115
136	8/10/2021 9:28	9:28 AM	59.9	2931711.663
137	8/10/2021 9:28	9:28 AM	64.9	9270886.298
138	8/10/2021 9:28	9:28 AM	67.3	16110953.89
139	8/10/2021 9:28	9:28 AM	69.8	28649777.58
140	8/10/2021 9:28	9:28 AM	68.7	22239307.24
141	8/10/2021 9:28	9:28 AM	70.2	31413856.44
142	8/10/2021 9:28	9:28 AM	70.9	36908063.12
143	8/10/2021 9:28	9:28 AM	67.2	15744223.81
144	8/10/2021 9:28	9:28 AM	67.4	16486226.22
145	8/10/2021 9:28	9:28 AM	66.9	14693364.58
146	8/10/2021 9:28	9:28 AM	69	23829847.04
147	8/10/2021 9:28	9:28 AM	73.9	73641267.47
148	8/10/2021 9:28	9:28 AM	71.9	46464498.57
149	8/10/2021 9:28	9:28 AM	68.8	22757327.25
150	8/10/2021 9:28	9:28 AM	68.4	20754929.13
151	8/10/2021 9:28	9:28 AM	64.7	8853627.68
152	8/10/2021 9:28	9:28 AM	64.8	9059855.161
153	8/10/2021 9:28	9:28 AM	70.6	34444608.64
154	8/10/2021 9:29	9:29 AM	71.1	38647486.55
155	8/10/2021 9:29	9:29 AM	65.9	11671354.35
156	8/10/2021 9:29	9:29 AM	60.2	3141385.644
157	8/10/2021 9:29	9:29 AM	59.3	2553414.115
158	8/10/2021 9:29	9:29 AM	58.6	2173307.88
159	8/10/2021 9:29	9:29 AM	57.3	1611095.389
160	8/10/2021 9:29	9:29 AM	57.9	1849785.006
161	8/10/2021 9:29	9:29 AM	65.2	9933933.644
162	8/10/2021 9:29	9:29 AM	68.5	21238373.53
163	8/10/2021 9:29	9:29 AM	71.2	39547702.16
164	8/10/2021 9:29	9:29 AM	71.6	43363193.12
165	8/10/2021 9:29	9:29 AM	67.6	17263198.12
166	8/10/2021 9:29	9:29 AM	69.9	29317116.63
167	8/10/2021 9:29	9:29 AM	74.8	90598551.61
168	8/10/2021 9:29	9:29 AM	74.6	86520945.09
169	8/10/2021 9:29	9:29 AM	77.4	164862262.2

170	8/10/2021 9:29	9:29 AM	74.6	86520945.09
171	8/10/2021 9:29	9:29 AM	72.6	54591025.76
172	8/10/2021 9:29	9:29 AM	72.3	50947309.57
173	8/10/2021 9:29	9:29 AM	70.2	31413856.44
174	8/10/2021 9:30	9:30 AM	68.9	23287413.5
175	8/10/2021 9:30	9:30 AM	65.5	10644401.68
176	8/10/2021 9:30	9:30 AM	71.4	41411527.94
177	8/10/2021 9:30	9:30 AM	69.2	24952913.13
178	8/10/2021 9:30	9:30 AM	76	119432151.2
179	8/10/2021 9:30	9:30 AM	76.1	122214083.3
180	8/10/2021 9:30	9:30 AM	68.9	23287413.5
181	8/10/2021 9:30	9:30 AM	69.6	27360325.18
182	8/10/2021 9:30	9:30 AM	70	30000000
183	8/10/2021 9:30	9:30 AM	71.7	44373251.65
184	8/10/2021 9:30	9:30 AM	75.8	114056818.9
185	8/10/2021 9:30	9:30 AM	70.2	31413856.44
186	8/10/2021 9:30	9:30 AM	63.1	6125213.834
187	8/10/2021 9:30	9:30 AM	57.6	1726319.812
188	8/10/2021 9:30	9:30 AM	56.4	1309547.497
189	8/10/2021 9:30	9:30 AM	55.2	993393.3644
190	8/10/2021 9:30	9:30 AM	55.9	1167135.435
191	8/10/2021 9:30	9:30 AM	57.6	1726319.812
192	8/10/2021 9:30	9:30 AM	59.5	2673752.814
193	8/10/2021 9:30	9:30 AM	64.7	8853627.68
194	8/10/2021 9:31	9:31 AM	69.5	26737528.14
195	8/10/2021 9:31	9:31 AM	65.4	10402105.51
196	8/10/2021 9:31	9:31 AM	61.3	4046888.648
197	8/10/2021 9:31	9:31 AM	59.4	2612890.77
198	8/10/2021 9:31	9:31 AM	67.3	16110953.89
199	8/10/2021 9:31	9:31 AM	59.9	2931711.663
200	8/10/2021 9:31	9:31 AM	56.2	1250608.15
201	8/10/2021 9:31	9:31 AM	57.1	1538584.152
202	8/10/2021 9:31	9:31 AM	59	2382984.704
203	8/10/2021 9:31	9:31 AM	64.6	8652094.509
204	8/10/2021 9:31	9:31 AM	74.8	90598551.61
205	8/10/2021 9:31	9:31 AM	72	47546795.77
206	8/10/2021 9:31	9:31 AM	69	23829847.04
207	8/10/2021 9:31	9:31 AM	68.7	22239307.24
208	8/10/2021 9:31	9:31 AM	66.7	14032054.24
209	8/10/2021 9:31	9:31 AM	66.3	12797385.56
210	8/10/2021 9:31	9:31 AM	69.5	26737528.14
211	8/10/2021 9:31	9:31 AM	70.2	31413856.44
212	8/10/2021 9:31	9:31 AM	73.7	70326864.46
213	8/10/2021 9:31	9:31 AM	74.8	90598551.61
214	8/10/2021 9:32	9:32 AM	78.6	217330788
215	8/10/2021 9:32	9:32 AM	74.3	80746044.12
216	8/10/2021 9:32	9:32 AM	72.7	55862614.1

217	8/10/2021 9:32	9:32 AM	72.4	52134024.86
218	8/10/2021 9:32	9:32 AM	71.5	42376126.34
219	8/10/2021 9:32	9:32 AM	71	37767762.35
220	8/10/2021 9:32	9:32 AM	69	23829847.04
221	8/10/2021 9:32	9:32 AM	73.6	68726029.58
222	8/10/2021 9:32	9:32 AM	69.9	29317116.63
223	8/10/2021 9:32	9:32 AM	72.2	49787607.22
224	8/10/2021 9:32	9:32 AM	73.4	65632848.72
225	8/10/2021 9:32	9:32 AM	72	47546795.77
226	8/10/2021 9:32	9:32 AM	70.2	31413856.44
227	8/10/2021 9:32	9:32 AM	65.6	10892341.64
228	8/10/2021 9:32	9:32 AM	68.3	20282489.26
229	8/10/2021 9:32	9:32 AM	63.6	6872602.958
230	8/10/2021 9:32	9:32 AM	63	5985786.945
231	8/10/2021 9:32	9:32 AM	63.4	6563284.872
232	8/10/2021 9:32	9:32 AM	67.1	15385841.52
233	8/10/2021 9:32	9:32 AM	63.9	7364126.747
234	8/10/2021 9:33	9:33 AM	59.8	2864977.758
235	8/10/2021 9:33	9:33 AM	59	2382984.704
236	8/10/2021 9:33	9:33 AM	54.9	927088.6298
237	8/10/2021 9:33	9:33 AM	53.3	641388.6269
238	8/10/2021 9:33	9:33 AM	57.7	1766530.966
239	8/10/2021 9:33	9:33 AM	60.9	3690806.312
240	8/10/2021 9:33	9:33 AM	64.7	8853627.68
241	8/10/2021 9:33	9:33 AM	64.4	8262686.11
242	8/10/2021 9:33	9:33 AM	67.2	15744223.81
243	8/10/2021 9:33	9:33 AM	66.4	13095474.97
244	8/10/2021 9:33	9:33 AM	65.7	11146056.87
245	8/10/2021 9:33	9:33 AM	64	7535659.295
246	8/10/2021 9:33	9:33 AM	62.3	5094730.957
247	8/10/2021 9:33	9:33 AM	68.9	23287413.5
248	8/10/2021 9:33	9:33 AM	72.2	49787607.22
249	8/10/2021 9:33	9:33 AM	73.3	64138862.69
250	8/10/2021 9:33	9:33 AM	66.7	14032054.24
251	8/10/2021 9:33	9:33 AM	67.6	17263198.12
252	8/10/2021 9:33	9:33 AM	70	30000000
253	8/10/2021 9:33	9:33 AM	71.2	39547702.16
254	8/10/2021 9:34	9:34 AM	69.9	29317116.63
255	8/10/2021 9:34	9:34 AM	74.8	90598551.61
256	8/10/2021 9:34	9:34 AM	73.7	70326864.46
257	8/10/2021 9:34	9:34 AM	75.9	116713543.5
258	8/10/2021 9:34	9:34 AM	74.7	88536276.8
259	8/10/2021 9:34	9:34 AM	70.1	30698789.77
260	8/10/2021 9:34	9:34 AM	69.8	28649777.58
261	8/10/2021 9:34	9:34 AM	68.3	20282489.26
262	8/10/2021 9:34	9:34 AM	71	37767762.35
263	8/10/2021 9:34	9:34 AM	70.1	30698789.77

264	8/10/2021 9:34	9:34 AM	71	37767762.35
265	8/10/2021 9:34	9:34 AM	72.7	55862614.1
266	8/10/2021 9:34	9:34 AM	71.3	40468886.48
267	8/10/2021 9:34	9:34 AM	72.6	54591025.76
268	8/10/2021 9:34	9:34 AM	67.5	16870239.76
269	8/10/2021 9:34	9:34 AM	64.3	8074604.412
270	8/10/2021 9:34	9:34 AM	67.6	17263198.12
271	8/10/2021 9:34	9:34 AM	62.2	4978760.722
272	8/10/2021 9:34	9:34 AM	62.4	5213402.486
273	8/10/2021 9:34	9:34 AM	65.8	11405681.89
274	8/10/2021 9:35	9:35 AM	68.1	19369626.87
275	8/10/2021 9:35	9:35 AM	62	4754679.577
276	8/10/2021 9:35	9:35 AM	68.9	23287413.5
277	8/10/2021 9:35	9:35 AM	67.6	17263198.12
278	8/10/2021 9:35	9:35 AM	61.3	4046888.648
279	8/10/2021 9:35	9:35 AM	69.5	26737528.14
280	8/10/2021 9:35	9:35 AM	64.9	9270886.298
281	8/10/2021 9:35	9:35 AM	66.1	12221408.33
282	8/10/2021 9:35	9:35 AM	67.6	17263198.12
283	8/10/2021 9:35	9:35 AM	70.1	30698789.77
284	8/10/2021 9:35	9:35 AM	69.8	28649777.58
285	8/10/2021 9:35	9:35 AM	72.4	52134024.86
286	8/10/2021 9:35	9:35 AM	72.7	55862614.1
287	8/10/2021 9:35	9:35 AM	72.9	58495337.99
288	8/10/2021 9:35	9:35 AM	70.9	36908063.12
289	8/10/2021 9:35	9:35 AM	71.1	38647486.55
290	8/10/2021 9:35	9:35 AM	68.1	19369626.87
291	8/10/2021 9:35	9:35 AM	73.5	67161634.16
292	8/10/2021 9:35	9:35 AM	66.2	12506081.5
293	8/10/2021 9:35	9:35 AM	71.6	43363193.12
294	8/10/2021 9:36	9:36 AM	66.1	12221408.33
295	8/10/2021 9:36	9:36 AM	68.4	20754929.13
296	8/10/2021 9:36	9:36 AM	73.2	62678883.93
297	8/10/2021 9:36	9:36 AM	72.1	48654302.92
298	8/10/2021 9:36	9:36 AM	68	18928720.33
299	8/10/2021 9:36	9:36 AM	68.2	19820803.44
300	8/10/2021 9:36	9:36 AM	65.7	11146056.87

Noise Level Graph Inputs		
Start	9:21:22 AM	0.389838
End	9:36:16 AM	0.400185
Interval	0:01:00	0.000694

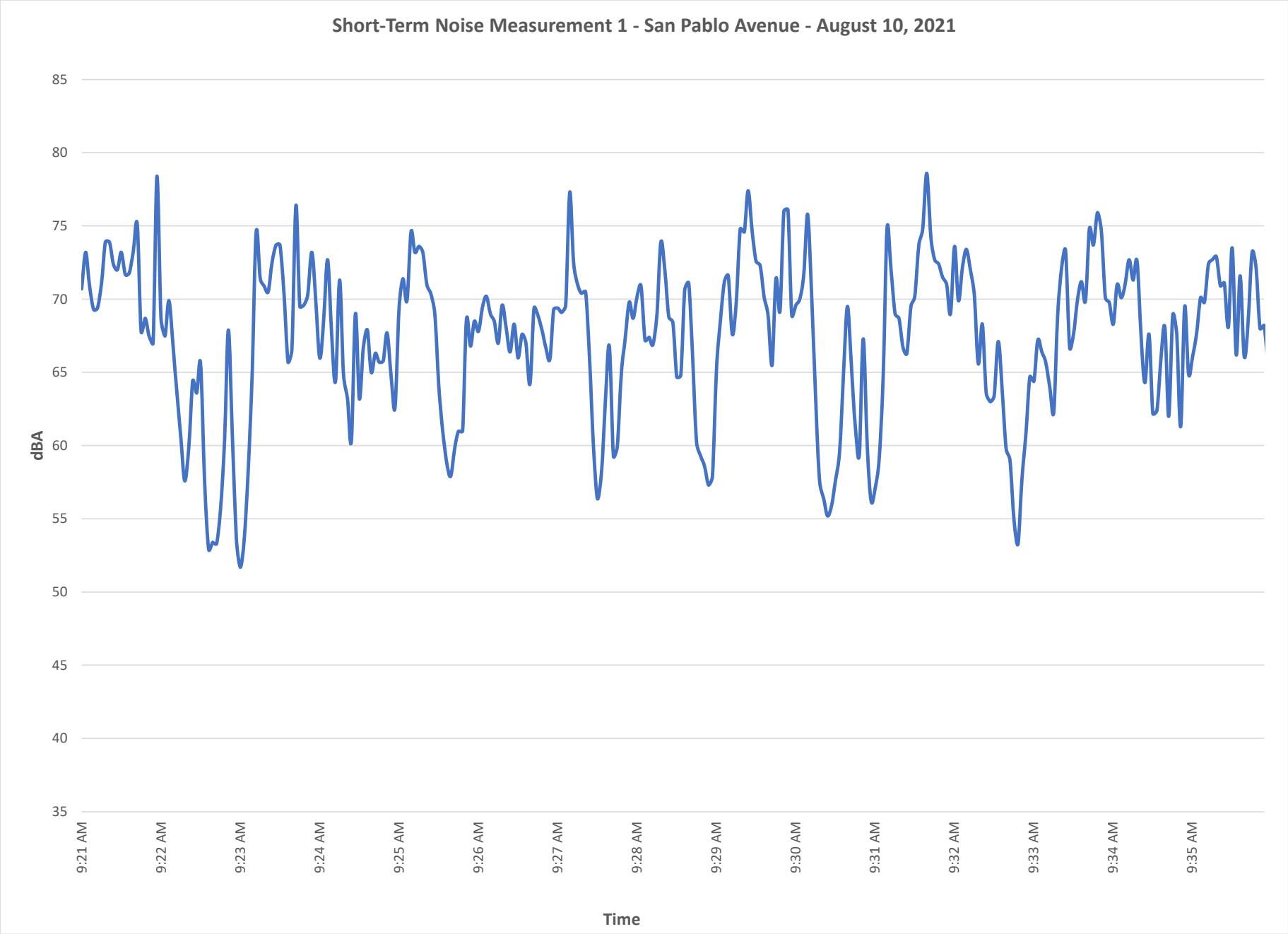
Short-Term Noise Measurement 1 - San Pablo Avenue - August 10, 2021
85
80
75
70
65
60
55
50
45
40
35
dBA
9:21 AM
9:22 AM
9:23 AM
9:24 AM
9:25 AM
9:26 AM
9:27 AM
9:28 AM
9:29 AM
9:30 AM
9:31 AM
9:32 AM
9:33 AM
9:34 AM
9:35 AM
Time

Short-Term Noise Measurement 2 - Adams Street

Data Logger 2		
Duration (seconds)		3
Weighting	A	
Response	SLOW	
Range	40-100	
L05		54.7
L10		51.2
L50		48.2
L90		46.2
L95		45.4
Lmax		64.9
Time		#############
SEL		79.9
Leq		**50.4**

No.s	Date Time	Time	dB	Sound Energy
1	8/10/2021 9:57	9:57 AM	50.4	328943.4588
2	8/10/2021 9:57	9:57 AM	46.8	143589.0277
3	8/10/2021 9:57	9:57 AM	47.4	164862.2622
4	8/10/2021 9:57	9:57 AM	46.7	140320.5424
5	8/10/2021 9:57	9:57 AM	47.5	168702.3976
6	8/10/2021 9:57	9:57 AM	47.6	172631.9812
7	8/10/2021 9:57	9:57 AM	47.6	172631.9812
8	8/10/2021 9:57	9:57 AM	46.9	146933.6458
9	8/10/2021 9:57	9:57 AM	46.1	122214.0833
10	8/10/2021 9:57	9:57 AM	45.2	99339.33644
11	8/10/2021 9:57	9:57 AM	44.8	90598.55161
12	8/10/2021 9:58	9:58 AM	44.7	88536.2768
13	8/10/2021 9:58	9:58 AM	45.3	101653.2468
14	8/10/2021 9:58	9:58 AM	47.2	157442.2381
15	8/10/2021 9:58	9:58 AM	46.8	143589.0277
16	8/10/2021 9:58	9:58 AM	48.5	212383.7353
17	8/10/2021 9:58	9:58 AM	46.7	140320.5424
18	8/10/2021 9:58	9:58 AM	47.1	153858.4152
19	8/10/2021 9:58	9:58 AM	47.4	164862.2622
20	8/10/2021 9:58	9:58 AM	47.5	168702.3976
21	8/10/2021 9:58	9:58 AM	48.7	222393.0724
22	8/10/2021 9:58	9:58 AM	50.6	344446.0864
23	8/10/2021 9:58	9:58 AM	50.6	344446.0864
24	8/10/2021 9:58	9:58 AM	50.3	321455.7916
25	8/10/2021 9:58	9:58 AM	50.7	352469.2665
26	8/10/2021 9:58	9:58 AM	50.4	328943.4588
27	8/10/2021 9:58	9:58 AM	49	238298.4704
28	8/10/2021 9:58	9:58 AM	48.9	232874.135

29	8/10/2021 9:58	9:58 AM	49	238298.4704
30	8/10/2021 9:58	9:58 AM	48.4	207549.2913
31	8/10/2021 9:58	9:58 AM	49.5	267375.2814
32	8/10/2021 9:59	9:59 AM	47.7	176653.0966
33	8/10/2021 9:59	9:59 AM	47.7	176653.0966
34	8/10/2021 9:59	9:59 AM	47.5	168702.3976
35	8/10/2021 9:59	9:59 AM	47.7	176653.0966
36	8/10/2021 9:59	9:59 AM	47.9	184978.5006
37	8/10/2021 9:59	9:59 AM	47.3	161109.5389
38	8/10/2021 9:59	9:59 AM	47.4	164862.2622
39	8/10/2021 9:59	9:59 AM	47.2	157442.2381
40	8/10/2021 9:59	9:59 AM	47.8	180767.8758
41	8/10/2021 9:59	9:59 AM	47.6	172631.9812
42	8/10/2021 9:59	9:59 AM	47.7	176653.0966
43	8/10/2021 9:59	9:59 AM	46.8	143589.0277
44	8/10/2021 9:59	9:59 AM	48.3	202824.8926
45	8/10/2021 9:59	9:59 AM	48.2	198208.0344
46	8/10/2021 9:59	9:59 AM	47.9	184978.5006
47	8/10/2021 9:59	9:59 AM	55	948683.2981
48	8/10/2021 9:59	9:59 AM	56.9	1469336.458
49	8/10/2021 9:59	9:59 AM	53.4	656328.4872
50	8/10/2021 9:59	9:59 AM	57.8	1807678.758
51	8/10/2021 9:59	9:59 AM	58.3	2028248.926
52	##############	10:00 AM	50.9	369080.6312
53	##############	10:00 AM	48.2	198208.0344
54	##############	10:00 AM	48.9	232874.135
55	##############	10:00 AM	48.5	212383.7353
56	##############	10:00 AM	49.6	273603.2518
57	##############	10:00 AM	49.3	255341.4115
58	##############	10:00 AM	49.8	286497.7758
59	##############	10:00 AM	51.1	386474.8655
60	##############	10:00 AM	50.8	360679.3304
61	##############	10:00 AM	50.1	306987.8977
62	##############	10:00 AM	49.1	243849.1548
63	##############	10:00 AM	48.5	212383.7353
64	##############	10:00 AM	47.9	184978.5006
65	##############	10:00 AM	49.1	243849.1548
66	##############	10:00 AM	54.8	905985.5161
67	##############	10:00 AM	50.8	360679.3304
68	##############	10:00 AM	48.9	232874.135
69	##############	10:00 AM	48.9	232874.135
70	##############	10:00 AM	53	598578.6945
71	##############	10:00 AM	49.1	243849.1548
72	##############	10:01 AM	47.5	168702.3976
73	##############	10:01 AM	47.6	172631.9812
74	##############	10:01 AM	47.8	180767.8758
75	##############	10:01 AM	46.5	134005.0776

76	##############	10:01 AM	46.8	143589.0277
77	##############	10:01 AM	46.2	125060.815
78	##############	10:01 AM	46.1	122214.0833
79	##############	10:01 AM	49.3	255341.4115
80	##############	10:01 AM	61.5	4237612.634
81	##############	10:01 AM	58.8	2275732.725
82	##############	10:01 AM	53.4	656328.4872
83	##############	10:01 AM	50.7	352469.2665
84	##############	10:01 AM	49.2	249529.1313
85	##############	10:01 AM	48.9	232874.135
86	##############	10:01 AM	47.2	157442.2381
87	##############	10:01 AM	48.5	212383.7353
88	##############	10:01 AM	47.8	180767.8758
89	##############	10:01 AM	51	377677.6235
90	##############	10:01 AM	57	1503561.701
91	##############	10:01 AM	64.3	8074604.412
92	##############	10:02 AM	58.8	2275732.725
93	##############	10:02 AM	52.4	521340.2486
94	##############	10:02 AM	49.3	255341.4115
95	##############	10:02 AM	49.1	243849.1548
96	##############	10:02 AM	49	238298.4704
97	##############	10:02 AM	48	189287.2033
98	##############	10:02 AM	48.6	217330.788
99	##############	10:02 AM	49.5	267375.2814
100	##############	10:02 AM	50.5	336605.5363
101	##############	10:02 AM	50.9	369080.6312
102	##############	10:02 AM	50.9	369080.6312
103	##############	10:02 AM	49.7	279976.2902
104	##############	10:02 AM	49.7	279976.2902
105	##############	10:02 AM	49.2	249529.1313
106	##############	10:02 AM	48.8	227573.2725
107	##############	10:02 AM	48.2	198208.0344
108	##############	10:02 AM	47.5	168702.3976
109	##############	10:02 AM	47.8	180767.8758
110	##############	10:02 AM	47.6	172631.9812
111	##############	10:02 AM	47.2	157442.2381
112	##############	10:03 AM	47.8	180767.8758
113	##############	10:03 AM	47.5	168702.3976
114	##############	10:03 AM	46.1	122214.0833
115	##############	10:03 AM	46.2	125060.815
116	##############	10:03 AM	47.6	172631.9812
117	##############	10:03 AM	47.5	168702.3976
118	##############	10:03 AM	47	150356.1701
119	##############	10:03 AM	47.2	157442.2381
120	##############	10:03 AM	47.8	180767.8758
121	##############	10:03 AM	48.5	212383.7353
122	##############	10:03 AM	52.7	558626.141

123	##############	10:03 AM	50.2	314138.5644
124	##############	10:03 AM	49.6	273603.2518
125	##############	10:03 AM	49	238298.4704
126	##############	10:03 AM	51.8	454068.3745
127	##############	10:03 AM	48.8	227573.2725
128	##############	10:03 AM	48.1	193696.2687
129	##############	10:03 AM	49.8	286497.7758
130	##############	10:03 AM	48.1	193696.2687
131	##############	10:03 AM	51.8	454068.3745
132	##############	10:04 AM	48.6	217330.788
133	##############	10:04 AM	48.1	193696.2687
134	##############	10:04 AM	49	238298.4704
135	##############	10:04 AM	50	300000
136	##############	10:04 AM	49	238298.4704
137	##############	10:04 AM	48.2	198208.0344
138	##############	10:04 AM	47.4	164862.2622
139	##############	10:04 AM	46.2	125060.815
140	##############	10:04 AM	47.2	157442.2381
141	##############	10:04 AM	48	189287.2033
142	##############	10:04 AM	47.8	180767.8758
143	##############	10:04 AM	47.1	153858.4152
144	##############	10:04 AM	47.2	157442.2381
145	##############	10:04 AM	47.1	153858.4152
146	##############	10:04 AM	46.8	143589.0277
147	##############	10:04 AM	47.1	153858.4152
148	##############	10:04 AM	47.1	153858.4152
149	##############	10:04 AM	47.6	172631.9812
150	##############	10:04 AM	52.4	521340.2486
151	##############	10:04 AM	59.1	2438491.548
152	##############	10:05 AM	49.7	279976.2902
153	##############	10:05 AM	47.2	157442.2381
154	##############	10:05 AM	52.4	521340.2486
155	##############	10:05 AM	51	377677.6235
156	##############	10:05 AM	49.5	267375.2814
157	##############	10:05 AM	50	300000
158	##############	10:05 AM	49.3	255341.4115
159	##############	10:05 AM	48.8	227573.2725
160	##############	10:05 AM	48.9	232874.135
161	##############	10:05 AM	47.8	180767.8758
162	##############	10:05 AM	47.3	161109.5389
163	##############	10:05 AM	47.5	168702.3976
164	##############	10:05 AM	47.5	168702.3976
165	##############	10:05 AM	46.9	146933.6458
166	##############	10:05 AM	47.8	180767.8758
167	##############	10:05 AM	48.2	198208.0344
168	##############	10:05 AM	46.5	134005.0776
169	##############	10:05 AM	45.2	99339.33644

170	##############	10:05 AM	45.4	104021.0551
171	##############	10:05 AM	47.8	180767.8758
172	##############	10:06 AM	49.1	243849.1548
173	##############	10:06 AM	48.5	212383.7353
174	##############	10:06 AM	48.7	222393.0724
175	##############	10:06 AM	47.6	172631.9812
176	##############	10:06 AM	46.7	140320.5424
177	##############	10:06 AM	47.5	168702.3976
178	##############	10:06 AM	46.7	140320.5424
179	##############	10:06 AM	44.7	88536.2768
180	##############	10:06 AM	44.5	84551.48794
181	##############	10:06 AM	44.1	77111.87348
182	##############	10:06 AM	43.9	73641.26747
183	##############	10:06 AM	44.9	92708.86298
184	##############	10:06 AM	45.4	104021.0551
185	##############	10:06 AM	45.9	116713.5435
186	##############	10:06 AM	46.4	130954.7497
187	##############	10:06 AM	46.5	134005.0776
188	##############	10:06 AM	46.9	146933.6458
189	##############	10:06 AM	47.2	157442.2381
190	##############	10:06 AM	47.5	168702.3976
191	##############	10:06 AM	47.4	164862.2622
192	##############	10:07 AM	47.7	176653.0966
193	##############	10:07 AM	48.2	198208.0344
194	##############	10:07 AM	48.3	202824.8926
195	##############	10:07 AM	48	189287.2033
196	##############	10:07 AM	48.4	207549.2913
197	##############	10:07 AM	49.3	255341.4115
198	##############	10:07 AM	48.9	232874.135
199	##############	10:07 AM	49.3	255341.4115
200	##############	10:07 AM	50.2	314138.5644
201	##############	10:07 AM	48.2	198208.0344
202	##############	10:07 AM	47.4	164862.2622
203	##############	10:07 AM	47.9	184978.5006
204	##############	10:07 AM	49.3	255341.4115
205	##############	10:07 AM	49.8	286497.7758
206	##############	10:07 AM	49.6	273603.2518
207	##############	10:07 AM	49.1	243849.1548
208	##############	10:07 AM	49.9	293171.1663
209	##############	10:07 AM	49.7	279976.2902
210	##############	10:07 AM	48	189287.2033
211	##############	10:07 AM	47.2	157442.2381
212	##############	10:08 AM	47.9	184978.5006
213	##############	10:08 AM	48.9	232874.135
214	##############	10:08 AM	47.8	180767.8758
215	##############	10:08 AM	48.6	217330.788
216	##############	10:08 AM	47.6	172631.9812

217	##############	10:08 AM	48	189287.2033
218	##############	10:08 AM	48.3	202824.8926
219	##############	10:08 AM	47.9	184978.5006
220	##############	10:08 AM	48.2	198208.0344
221	##############	10:08 AM	48.9	232874.135
222	##############	10:08 AM	47.4	164862.2622
223	##############	10:08 AM	46.9	146933.6458
224	##############	10:08 AM	47.4	164862.2622
225	##############	10:08 AM	46.4	130954.7497
226	##############	10:08 AM	45.7	111460.5687
227	##############	10:08 AM	46.3	127973.8556
228	##############	10:08 AM	45.7	111460.5687
229	##############	10:08 AM	45.8	114056.8189
230	##############	10:08 AM	47.1	153858.4152
231	##############	10:08 AM	49.2	249529.1313
232	##############	10:09 AM	50.6	344446.0864
233	##############	10:09 AM	50.7	352469.2665
234	##############	10:09 AM	50.8	360679.3304
235	##############	10:09 AM	50.2	314138.5644
236	##############	10:09 AM	52	475467.9577
237	##############	10:09 AM	52	475467.9577
238	##############	10:09 AM	51.8	454068.3745
239	##############	10:09 AM	52	475467.9577
240	##############	10:09 AM	56	1194321.512
241	##############	10:09 AM	55.6	1089234.164
242	##############	10:09 AM	57.9	1849785.006
243	##############	10:09 AM	57.6	1726319.812
244	##############	10:09 AM	48.2	198208.0344
245	##############	10:09 AM	45	94868.32981
246	##############	10:09 AM	45.1	97078.09708
247	##############	10:09 AM	48.4	207549.2913
248	##############	10:09 AM	55.3	1016532.468
249	##############	10:09 AM	55.8	1140568.189
250	##############	10:09 AM	53.2	626788.8393
251	##############	10:09 AM	50	300000
252	##############	10:10 AM	49.7	279976.2902
253	##############	10:10 AM	48.2	198208.0344
254	##############	10:10 AM	47.6	172631.9812
255	##############	10:10 AM	48.6	217330.788
256	##############	10:10 AM	48.9	232874.135
257	##############	10:10 AM	48.5	212383.7353
258	##############	10:10 AM	48	189287.2033
259	##############	10:10 AM	47.4	164862.2622
260	##############	10:10 AM	48.9	232874.135
261	##############	10:10 AM	56.2	1250608.15
262	##############	10:10 AM	54.4	826268.611
263	##############	10:10 AM	50.1	306987.8977

264	##############	10:10 AM	49.9	293171.1663
265	##############	10:10 AM	47.6	172631.9812
266	##############	10:10 AM	47.9	184978.5006
267	##############	10:10 AM	48.1	193696.2687
268	##############	10:10 AM	49.8	286497.7758
269	##############	10:10 AM	48.8	227573.2725
270	##############	10:10 AM	49.3	255341.4115
271	##############	10:10 AM	49.2	249529.1313
272	##############	10:11 AM	49.4	261289.077
273	##############	10:11 AM	50.6	344446.0864
274	##############	10:11 AM	49.2	249529.1313
275	##############	10:11 AM	48.2	198208.0344
276	##############	10:11 AM	48.4	207549.2913
277	##############	10:11 AM	47.9	184978.5006
278	##############	10:11 AM	47.8	180767.8758
279	##############	10:11 AM	48.3	202824.8926
280	##############	10:11 AM	48.4	207549.2913
281	##############	10:11 AM	49.8	286497.7758
282	##############	10:11 AM	48.6	217330.788
283	##############	10:11 AM	48.2	198208.0344
284	##############	10:11 AM	47.8	180767.8758
285	##############	10:11 AM	46.7	140320.5424
286	##############	10:11 AM	45.1	97078.09708
287	##############	10:11 AM	46.1	122214.0833
288	##############	10:11 AM	45.4	104021.0551
289	##############	10:11 AM	48	189287.2033
290	##############	10:11 AM	47.3	161109.5389
291	##############	10:11 AM	47	150356.1701
292	##############	10:12 AM	45.6	108923.4164
293	##############	10:12 AM	45.8	114056.8189
294	##############	10:12 AM	46.9	146933.6458
295	##############	10:12 AM	46.5	134005.0776
296	##############	10:12 AM	46.9	146933.6458
297	##############	10:12 AM	48.3	202824.8926
298	##############	10:12 AM	47.6	172631.9812
299	##############	10:12 AM	47.7	176653.0966
300	##############	10:12 AM	47.8	180767.8758

Noise Level Graph Inputs		
Start	9:57:28 AM	0.414907
End	10:12:22 AM	0.425255
Interval	0:01:00	0.000694

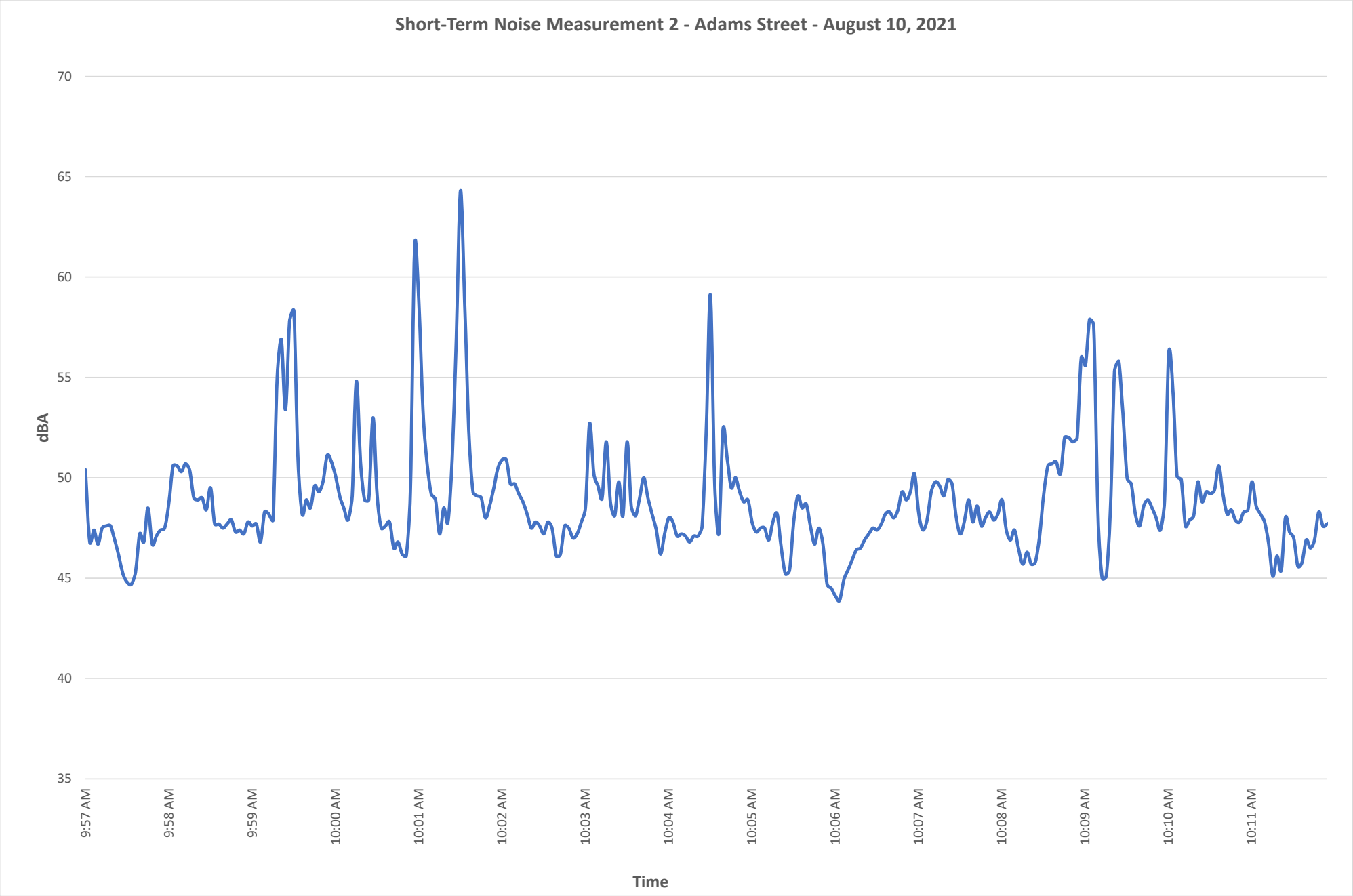
Short-Term Noise Measurement 2 - Adams Street - August 10, 2021
70
65
60
55
50
45
40
35
dBA
9:57 AM
9:58 AM
9:59 AM
10:00 AM
10:01 AM
10:02 AM
10:03 AM
10:04 AM
10:05 AM
10:06 AM
10:07 AM
10:08 AM
10:09 AM
10:10 AM
10:11 AM
Time

Roadway Construction Noise Model (RCNM),Version 1.1

Report date: 09/08/2021
Case Description: 540 San Pablo Avenue - Grading

**** Receptor #1 ****

Description	Land Use	Baselines (dBA) Daytime	Evening	Night
Single-Family Residential	Residential	65.0	50.0	50.0

Equipment

Description	Impact Device	Usage (%)	Spec Lmax (dBA)	Actual Lmax (dBA)	Receptor Distance (feet)	Estimated Shielding (dBA)
Dozer	No	40		81.7	160.0	0.0
Grader	No	40	85.0		160.0	0.0
Front End Loader	No	40		79.1	160.0	0.0

Results

	Calculated (dBA)		Day		Evening		Night		Noise Limits (dBA)			Noise Limit Exceedance (dBA)			
Equipment	Lmax	Leq	Lmax	Leq	Lmax	Leq	Lmax	Leq	Lmax	Leq	Lmax	Leq	Lmax	Leq	Lmax
Dozer	71.6	67.6	N/A	N/A	N/A	N/A	N/A	N/A	N/A	N/A	N/A	N/A	N/A	N/A	N/A
Grader	74.9	70.9	N/A	N/A	N/A	N/A	N/A	N/A	N/A	N/A	N/A	N/A	N/A	N/A	N/A
Front End Loader	69.0	65.0	N/A	N/A	N/A	N/A	N/A	N/A	N/A	N/A	N/A	N/A	N/A	N/A	N/A
Total	74.9	73.3	N/A	N/A	N/A	N/A	N/A	N/A	N/A	N/A	N/A	N/A	N/A	N/A	N/A

38HDR
Performance™ Series Air Conditioner with Puron® Refrigerant
1–1/2 to 5 Nominal Tons

Carrier®
Turn to the Experts.℠

Product Data

Puron™
the environmentally sound refrigerant

Performance™ SERIES

Carrier's Air Conditioners with Puron® refrigerant provide a collection of features unmatched by any other family of equipment. The 38HDR has been designed utilizing Carrier's Puron refrigerant. The environmentally sound refrigerant allows you to make a responsible decision in the protection of the earth's ozone layer.

As an Energy Star® Partner, Carrier Corporation has determined that this product meets the Energy Star® guidelines for energy efficiency. Refer to the combination ratings in the Product Data for system combinations that meet Energy Star® guidelines.

NOTE: Ratings contained in this document are subject to change at any time. Always refer to the AHRI directory (www.ahridirectory.org) for the most up-to-date ratings information.

INDUSTRY LEADING FEATURES / BENEFITS

Energy Efficiency

- 13 - 15 SEER/10.9 - 12.5 EER

Sound

- Levels as low as 68 dBA

Design Features

- New aesthetics
- Small footprint, same as old model and "stackable"
- WeatherArmor™ cabinet
  - — All steel cabinet construction
  - — Baked on powder paint
  - — Mesh coil guard

Reliability, Quality and Toughness

- Scroll compressor
- Crankcase Heater standard on sizes 030-060
- Factory-supplied filter drier
- High pressure switch
- Low pressure switch
- Line lengths up to 250' (76.2 m)
- Low ambient operation (down to -20°F/-28.9°C) with low ambient accessories.

MODEL NUMBER NOMENCLATURE

1	2	3	4	5	6	7	8	9	10	11	12	13
N	N	A	A	A/N	N	N	N	A/N	A/N	A/N	N	N
3	8	H	D	R	0	1	8	A	0	0	3	0
Product Series	HDR = Horizontal Discharge Condensing Unit			Cooling Capacity				Variations	Open	Open	Voltage	Minor Series
38=AC/HP	Major Model			1,000 Btuh Nominal				A=Standard	0=Not Defined	0=Not Defined	3=208/230–1 5=208/230–3 6=460/3	0, 1, 2...

38HDR

This product has been designed and manufactured to meet Energy Star® criteria for energy efficiency when matched with appropriate coil components. However, proper refrigerant charge and proper air flow are critical to achieve rated capacity and efficiency. Installation of this product should follow all manufacturing refrigerant charging and air flow instructions. **Failure to confirm proper charge and air flow may reduce energy efficiency and shorten equipment life.**

PHYSICAL DATA

UNIT 38HDR	018	024	030	036	048	060
NOMINAL CAPACITY (Tons)	1.5	2.0	2.50	3.0	4.0	5.0
OPERATING WEIGHT lb (kg)	155 (70.3)	180 (81.6)	200 (90.7)	218 (98.9)	284 (128.8)	294 (133.4)
REFRIGERANT TYPE	R–410A					
METERING DEVICE	TXV					
CHARGE lb (kg)	6.3 (2.86)	6.0 (2.73)	8.7 (3.95)	8.7 (3.95)	11.5 (5.23)	12.0 (5.45)
COMPRESSOR						
Type	Scroll					
Oil Charge (POE –oz)	25.0	25.0	25.0	25.0	42.0	42.0
Crankcase Heater (watts)	—	—	40	40	40	40
OUTDOOR FAN						
Rpm/Cfm	840/1720	840/1720	850/3900	850/3900	850/3900	850/3900
Diameter in. (mm)	18 (457)	18 (457)	24 (610)	24 (610)	24 (610)	24 (610)
No. Blades	3	3	3	3	3	3
Motor hp (w)	1/8 (93)	1/8 (93)	1/4 (187)	1/4 (187)	1/4 (187)	1/4 (187)
OUTDOOR COIL						
Face Area (sq ft)	5.8	7.3	12.1	12.1	14.1	14.1
No. Rows	2	2	2	2	2	2
FPI	20	20	20	20	20	20
HIGH PRESSURE SWITCH						
Cut–In (psig) Cutout (psig)	420 ± 25 650 ± 10	420 ± 25 650 ± 10	420 ± 25 650 ± 10	420 ± 25 650 ± 10	420 ± 25 650 ± 10	420 ± 25 650 ± 10
LOW PRESSURE SWITCH						
Cut–In (psig) Cutout (psig)	45 ± 25 20 ± 5	45 ± 25 20 ± 5	45 ± 25 20 ± 5	45 ± 25 20 ± 5	45 ± 25 20 ± 5	45 ± 25 20 ± 5
REFRIGERANT LINES						
Connection Type	Sweat					
Max. Liquid Line* (in.) OD	3/8	3/8	3/8	3/8	3/8	3/8
Rated Vapor Line† (in.) OD	5/8	5/8	3/4	3/4	7/8	1–1/8**
CONTROLS						
Control Voltage‡	24 vac					
System Voltage	208/230 v	208/230 v	208/230 v	208/230 v, Single and 3 Phase, 460 v, 3 Phase		
FINISH	Gray					

* See *Liquid Line Sizing For Cooling Only Systems with Puron Refrigerant* tables.

† Units are rated with 25 ft (7.6 m) of lineset length. See *Vapor Line Sizing and Cooling Capacity Loss* table when using other sizes and lengths of lineset.

‡ 24 v and a minimum of 40 va is provided in the fan coil unit.

** Vapor connection size is 7/8 inch.

FPI – Fins Per Inch

POE – Polyol Ester

REFRIGERANT PIPING LENGTH LIMITATIONS

Liquid Line Sizing and Maximum Total Equivalent Lengths† for Cooling Only Systems with Puron® Refrigerant:

The maximum allowable length of a residential split system depends on the liquid line diameter and vertical separation between indoor and outdoor units.

See Table below for liquid line sizing and maximum lengths :

Maximum Total Equivalent Length
Outdoor Unit BELOW Indoor Unit

Size	Liquid Line Connection	Liquid Line Diam. w/ TXV	AC with Puron Refrigerant Maximum Total Equivalent Length†: Outdoor unit BELOW Indoor Vertical Separation ft (m)								
			0–5 (0–1.5)	6–10 (1.8–3.0)	11–20 (3.4–6.1)	21–30 (6.4–9.1)	31–40 (9.4–12.2)	41–50 (12.5–15.2)	51–60 (15.5–18.3)	61–70 (18.6–21.3)	71–80 (21.6–24.4)
018 AC with Puron	3/8	1/4	150	150	125	100	100	75	– –	– –	– –
		5/16	250*	250*	250*	250*	250*	250*	250*	225*	150
		3/8	250*	250*	250*	250*	250*	250*	250*	250*	250*
024 AC with Puron	3/8	1/4	75	75	75	50	50	– –	– –	– –	– –
		5/16	250*	250*	250*	250*	250*	225*	175	125	100
		3/8	250*	250*	250*	250*	250*	250*	250*	250*	250*
030 AC with Puron	3/8	1/4	30	– –	– –	– –	– –	– –	– –	– –	– –
		5/16	175	225*	200	175	125	100	75	– –	– –
		3/8	250*	250*	250*	250*	250*	250*	250*	250*	250*
036 AC with Puron	3/8	5/16	175	150	150	100	100	100	75	– –	– –
		3//8	250*	250*	250*	250*	250*	250*	250*	250*	250*
048 AC with Puron	3/8	3/8	250*	250*	250*	250*	250*	250*	230	160	– –
060 AC with Puron	3/8	3/8	250*	250*	250*	225*	190	150	110	– –	– –

*** Maximum actual length not to exceed 200 ft (61 m)**

† Total equivalent length accounts for losses due to elbows or fitting. See the Long Line Guideline for details.

– – = outside acceptable range

Maximum Total Equivalent Length
Outdoor Unit ABOVE Indoor Unit

Size	Liquid Line Connection	Liquid Line Diam. w/ TXV	AC with Puron Refrigerant Maximum Total Equivalent Length†: Outdoor unit ABOVE Indoor Vertical Separation ft (m)							
			25 (7.6)	26–50 (7.9–15.2)	51–75 (15.5–22.9)	76–100 (23.2–30.5)	101–125 (30.8–38.1)	126–150 (38.4–45.7)	151–175 (46.0–53.3)	176–200 (53.6–61.0)
018 AC with Puron	3/8	1/4	175	250*	250*	250*	250*	250*	250*	250*
		5/16	250*	250*	250*	250*	250*	250*	250*	250*
		3/8	250*	250*	250*	250*	250*	250*	250*	250*
024 AC with Puron	3/8	1/4	100	125	175	200	225*	250*	250*	250*
		5/16	250*	250*	250*	250*	250*	250*	250*	250*
		3/8	250*	250*	250*	250*	250*	250*	250*	250*
030 AC with Puron	3/8	1/4	30	– –	– –	– –	– –	– –	– –	– –
		5/16	250*	250*	250*	250*	250*	250*	250*	250*
		3/8	250*	250*	250*	250*	250*	250*	250*	250*
036 AC with Puron	3/8	5/16	225*	250*	250*	250*	250*	250*	250*	250*
		3/8	250*	250*	250*	250*	250*	250*	250*	250*
048 AC with Puron	3/8	3/8	250*	250*	250*	250*	250*	250*	250*	250*
060 AC with Puron	3/8	3/8	250*	250*	250*	250*	250*	250*	250*	250*

*** Maximum actual length not to exceed 200 ft (61 m)**

† Total equivalent length accounts for losses due to elbows or fitting. See the Long Line Guideline for details.

– – = outside acceptable range

38HDR

REFRIGERANT CHARGE ADJUSTMENTS

Liquid Line Size	Puron Charge oz/ft (g/m)
3/8	0.60 (17.74) (Factory charge for lineset = 9 oz / 266.16 g)
5/16	0.40 (11.83)
1/4	0.27 (7.98)

Units are factory charged for 15 ft (4.6 m) of 3/8" liquid line. The factory charge for 3/8" lineset 9 oz (266.16 g). When using other length or diameter liquid lines, charge adjustments are required per the chart above.

Charging Formula:

[(Lineset oz/ft x total length) – (factory charge for lineset)] = charge adjustment

Example 1: System has 15 ft of line set using existing 1/4" liquid line. What charge adjustment is required?

Formula: (.27 oz/ft x 15ft) – (9 oz) = (-4.95) oz.

Net result is to remove 4.95 oz of refrigerant from the system

Example 2: System has 45 ft of existing 5/16" liquid line. What is the charge adjustment?

Formula: (.40 oz/ft. x 45ft) – (9 oz.) = 9 oz.

Net result is to add 9 oz of refrigerant to the system

LONG LINE APPLICATIONS

An application is considered Long Line, when the refrigerant level in the system requires the use of accessories to maintain acceptable refrigerant management for systems reliability. See Accessory Usage Guideline table for required accessories. Defining a system as long line depends on the liquid line diameter, actual length of the tubing, and vertical separation between the indoor and outdoor units.

For Air Conditioner systems, the chart below shows when an application is considered Long Line.

AC WITH PURON® REFRIGERANT LONG LINE DESCRIPTION ft (m)
Beyond these lengths, long line accessories are required

Liquid Line Size	Units On Same Level	Outdoor Below Indoor	Outdoor Above Indoor
1/4	No accessories needed within allowed lengths	No accessories needed within allowed lengths	175 (53.3)
5/16	120 (36.6)	50 (15.2) vertical or 120 (36.6) total	120 (36.6)
3/8	80 (24.4)	35 (10.7) vertical or 80 24.4) total	80 (24.4)

Note: See Long Line Guideline for details

VAPOR LINE SIZING AND COOLING CAPACITY LOSS

Acceptable vapor line diameters provide adequate oil return to the compressor while avoiding excessive capacity loss. The suction line diameters shown in the chart below are acceptable for AC systems with Puron refrigerant:

Vapor Line Sizing and Cooling Capacity Losses — Puron® Refrigerant 1-Stage Air Conditioner Applications

Unit Nominal Size (Btuh)	Maximum Liquid Line Diameters (In. OD)	Vapor Line Diameters (In. OD)	Cooling Capacity Loss (%) Total Equivalent Line Length ft. (m)								
			26–50 (7.9–15.2)	51–80 (15.5–24.4)	81–100 (24.7–30.5)	101–125 (30.8–38.1)	126–150 (38.4–45.7)	151–175 (46.0–53.3)	176–200 (53.6–61.0)	201–225 (61.3–68.6)	226–250 (68.9–76.2)
018 1 Stage AC with Puron	3/8	1/2	1	2	3	5	6	7	8	9	11
		5/8	0	1	1	1	2	2	2	3	3
		3/4	0	0	0	0	1	1	1	1	1
024 1 Stage AC with Puron	3/8	5/8	0	1	2	2	3	3	4	5	5
		3/4	0	0	1	1	1	1	1	2	2
		7/8	0	0	0	0	0	1	1	1	1
030 1 Stage AC with Puron	3/8	5/8	1	2	3	3	4	5	6	7	8
		3/4	0	0	1	1	1	2	2	2	3
		7/8	0	0	0	0	1	1	1	1	1
036 1 Stage AC with Puron	3/8	5/8	1	2	4	5	6	8	9	10	12
		3/4	0	1	1	2	2	3	3	4	4
		7/8	0	0	0	1	1	1	1	2	2
048 1 Stage AC with Puron	3/8	3/4	0	1	2	3	4	5	5	6	7
		7/8	0	0	1	1	2	2	2	3	3
		1 1/8	0	0	0	0	0	0	0	1	1
060 1 Stage AC with Puron	3/8	3/4	1	2	4	5	6	7	9	10	11
		7/8	0	1	2	2	3	4	4	5	5
		1 1/8	0	0	0	1	1	1	1	1	1

Applications in this area may be long line and may have height restrictions. See the *Residential Piping and Long Line Guideline*.

ACCESSORY THERMOSTATS

THERMOSTAT / SUBBASE PKG.	DESCRIPTION
TP–PRH01–A	Programmable Thermidistat
TP–NRH01–A	Non–programmable Thermidistat
TP–PAC01	Performance Series Programmable AC Stat
TP–NAC01	Performance Series Non–programmable AC Stat
TSTATCCSEN01–B	Outdoor Air Temperature Sensor
TSTATXXBBP01	Backplate for Builder's Thermostat
TSTATXXNBP01	Backplate for Non–Programmable Thermostat
TSTATXXPBP01	Backplate for Programmable Thermostat
TSTATXXCNV10	Thermostat Conversion Kit (4 to 5 wires) – 10 Pack

ACCESSORIES

KIT NUMBER	KIT NAME	018	024	030	036	048	060
KAACH1401AAA	Crankcase Heater	X	X				
Standard	Crankcase Heater			S	S	S	S
KAAFT0101AAA	Evaporator Freeze Stat	X	X	X	X	X	X
KAATD0101TDR	Time Delay Relay	X	X	X	X	X	X
KAAWS0101AAA	Winter Start Kit (for low ambient)	X	X	X	X	X	X
53DS–900–––086	Low Ambient Control (Puron)	X	X	X	X	X	X
53DS–900–––070	Wind Baffle	X					
53DS–900–––087	Wind Baffle		X				
53DS–900–––071	Wind Baffle			X	X		
53DS–900–––088	Wind Baffle					X	X
53DS–900–––075	Stacking Kit	X	X				
53DS–900–––076	Stacking Kit			X	X	X	X
53DS–900–––077	Wall Mounting Kit	X	X				
53DS–900–––078	Wall Mounting Kit			X	X	X	X

X = Accessory, S = Standard

ACCESSORY USAGE GUIDELINE

ACCESSORY	REQUIRED FOR LOW–AMBIENT COOLING APPLICATIONS (Below 55°F/12.8°C)	REQUIRED FOR LONG LINE APPLICATIONS* (Over 80 ft. / 24.4 m)	REQUIRED FOR SEA COAST APPLICATIONS (Within 2 miles / 3.2 km)
Compressor Start Assist Capacitor and Relay	Yes	Yes	No
Crankcase Heater	Yes	Yes	No
Evaporator Freeze Thermostat	Yes	No	No
Hard Shutoff TXV	Yes	Yes	Yes
Liquid Line Solenoid Valve	No	See Longline Application Guideline	No
Low–ambient Control	Yes	No	No
Winter Start Control	Yes	No	No

* For tubing line sets between 80 and 200 ft. (24.38 and 60.96 m) and/or 35 ft. (10.7 m) vertical differential, refer to Residential Piping and Longline Guideline.

Accessory Description and Usage (Listed Alphabetically)

1. Crankcase Heater

An electric resistance heater which mounts to the base of the compressor to keep the lubricant warm during off cycles. Improves compressor lubrication on restart and minimizes the chance of liquid slugging.

Usage Guideline:

Required in low ambient cooling applications.

Required in long line applications.

Suggested in all commercial applications.

2. Evaporator Freeze Thermostat

An SPST temperature-actuated switch that stops unit operation when evaporator reaches freeze-up conditions.

Usage Guideline:

Required when low ambient kit has been added.

3. Low-Ambient Control

A fan-speed control device activated by a temperature sensor, designed to control condenser fan motor speed in response to the saturated, condensing temperature during operation in cooling mode only. For outdoor temperatures down to -20°F (-28.9°C), it maintains condensing temperature at 100°F ±10°F (37.8°C ± 5.5°C).

Usage Guideline:

A Low Ambient Controller must be used when cooling operation is used at outdoor temperatures below 55°F (12.8°C).

Suggested for all commercial applications.

4. Outdoor Air Temperature Sensor

Designed for use with Carrier Thermostats listed in this publication. This device enables the thermostat to display the outdoor temperature. This device also

is required to enable special thermostat features such as auxiliary heat lock out.

Usage Guideline:

Suggested for all Carrier thermostats listed in this publication.

5. Thermostatic Expansion Valve (TXV)

A modulating flow-control valve which meters refrigerant liquid flow rate into the evaporator in response to the superheat of the refrigerant gas leaving the evaporator.

Kit includes valve, adapter tubes, and external equalizer tube. Hard shut off types are available.

NOTE: When using a hard shut off TXV with single phase reciprocating compressors, a Compressor Start Assist Capacitor and Relay is required.

Usage Guideline:

Accessory required to meet ARI rating and system reliability, where indoor not equipped.

Hard shut off TXV or LLS required in air conditioner long line applications.

Required for use on all zoning systems.

6. Time-Delay Relay

An SPST delay relay which briefly continues operation of indoor blower motor to provide additional cooling after the compressor cycles off.

NOTE: Most indoor unit controls include this feature. For those that do not, use the guideline below.

Usage Guideline:

Accessory required to meet ARI rating, where indoor not equipped.

7. Winter Start Control

This control is designed to alleviate nuisance opening of the low-pressure switch by bypassing it for the first 3 minutes of operation.

ELECTRICAL DATA

38HDR UNIT SIZE	V–PH–Hz	VOLTAGE RANGE*		COMPRESSOR		OUTDOOR FAN MOTOR			MIN CKT AMPS	FUSE/CKT BKR AMPS
		Min	Max	RLA	LRA	FLA	NEC Hp	kW Out		
018–31	208/230–1–60	187	253	9.0	48.0	0.8	0.125	0.09	12.1	20
024–32	208/230–1–60	187	253	13.5	58.3	0.8	0.125	0.09	17.7	25
030–31	208/230–1–60	187	253	14.1	73.0	1.5	0.250	0.19	19.1	30
036–31	208/230–1–60	187	253	14.1	77.0	1.5	0.250	0.19	19.1	30
	208/230–3–60	187	253	9.2	71.0	1.5	0.250	0.19	13.0	20
	460–3–60	414	506	5.6	38.0	0.8	0.250	0.19	7.9	10
048–32	208/230–1–60	187	253	19.9	109.0	1.5	0.250	0.19	26.4	40
	208/230–3–60	187	253	13.1	83.1	1.5	0.250	0.19	17.9	25
	460–3–60	414	506	6.1	41.0	0.8	0.250	0.19	8.4	15
060–32	208/230–1–60	187	253	26.4	134.0	1.5	0.250	0.19	34.5	60
	208/230–3–60	187	253	16.0	110.0	1.5	0.250	0.19	21.5	30
	460–3–60	414	506	7.8	52.0	0.8	0.250	0.19	10.6	15

* Permissible limits of the voltage range at which the unit will operate satisfactorily

FLA – Full Load Amps

HACR – Heating, Air Conditioning, Refrigeration

LRA – Locked Rotor Amps

NEC – National Electrical Code

RLA – Rated Load Amps (compressor)

NOTE: Control circuit is 24–V on all units and requires external power source. Copper wire must be used from service disconnect to unit. All motors/compressors contain internal overload protection.

Complies with 2007 requirements of ASHRAE Standards 90.1

A-WEIGHTED SOUND POWER (dBA)

Unit Size	Standard Rating (dBA)	Typical Octave Band Spectrum (dBA) (without tone adjustment)						
		125	250	500	1000	2000	4000	8000
018–31	68	52.0	57.5	60.5	63.5	60.5	57.5	46.5
024–32	69	57.5	61.5	63.0	61.0	60.0	56.0	45.0
030–31	72	56.5	63.0	65.0	66.0	64.0	62.5	57.0
036–31	72	65.0	61.5	63.5	65.0	64.5	61.0	54.5
048–32	72	58.5	61.0	64.0	67.5	66.0	64.0	57.0
060–32	72	63.0	61.5	64.0	66.5	66.0	64.5	55.5

NOTE: Tested in accordance with ARI Standard 270–08 (not listed in AHRI).

CHARGING SUBCOOLING (TXV-TYPE EXPANSION DEVICE)

UNIT SIZE–VOLTAGE, SERIES	REQUIRED SUBCOOLING °F (°C)
018–31	12 (6.7)
024–32	12 (6.7)
030–31	12 (6.7)
036–31	12 (6.7)
048–32	12 (6.7)
060–32	12 (6.7)

DIMENSIONS - ENGLISH

UNIT	SERIES	ELECTRICAL CHARACTERISTICS				A	B	C	D	E	F	G	H	J	K	L	M	N	P	OPERATING WEIGHT(lbs)	SHIPPING WEIGHT(lbs)	SHIPPING DIMENSIONS (L x W x H)
38HDR018	1	X	O	O	O	25 1/8"	36 15/16"	14 9/16"	16"	23 7/16"	17 3/16"	17 1/8"	22"	13"	6 5/8"	11 1/4"	5/8"	2 15/16"	6"	155	171	42 9/10" X 18" X 28 1/10"
38HDR024	1,2	X	O	O	O	31 1/8"	36 15/16"	14 9/16"	16"	23 7/16"	17 3/16"	23 1/8"	28"	14"	6 3/4"	11 5/8"	5/8"	2 15/16"	6"	180	198	42 9/10" X 18" X 34 1/10"
38HDR030	1	X	O	O	O	37 3/16"	44 9/16"	17 1/16"	18 7/16"	30 1/2"	19 5/8"	29 3/16"	34 1/16"	13 11/16"	8 1/8"	15 7/8"	3/4"	3 7/16"	6 1/2"	200	223	50 1/2" X 20 1/2" X 40 2/10"
38HDR036	1	X	O	X	X	37 3/16"	44 9/16"	17 1/16"	18 7/16"	30 1/2"	19 5/8"	29 3/16"	34 1/16"	13 11/16"	8 1/8"	15 7/8"	3/4"	3 7/16"	6 1/2"	218	240	50 1/2" X 20 1/2" X 40 2/10"
38HDR048	1,2	X	O	X	X	43 3/16"	44 9/16"	17 1/16"	18 7/16"	30 1/2"	19 5/8"	35 3/16"	40 1/16"	14 1/2"	8 1/2"	18 7/8"	7/8"	3 7/16"	6 1/2"	284	309	50 1/2" X 20 1/2" X 46 2/10"
38HDR060	1,2	X	O	X	X	43 3/16"	44 9/16"	17 1/16"	18 7/16"	30 1/2"	19 5/8"	35 3/16"	40 1/16"	14 1/2"	8 1/2"	18 7/8"	7/8"	3 7/16"	6 1/2"	294	319	50 1/2" X 20 1/2" X 46 2/10"
		208-230-1-60	230-1-60	208/230-3-60	460-3-60																	

X = YES
O = NO

1. REQUIRED CLEARANCES: WITH COIL FACING WALL; ALLOW 6" MIN CLEARANCE ON COIL SIDE AND COIL END AND 36" MIN CLEARANCE ON COMPRESSOR END AND FAN SIDE. WITH FAN FACING WALL; ALLOW 8" MIN CLEARANCE ON FAN SIDE AND COIL END AND 36" MIN CLEARANCE ON COMPRESSOR END AND COIL SIDE. WITH MULTI UNIT APPLICATION; ARRANGE UNITS SO DISCHARGE OF ONE DOES NOT ENTER INLET OF ANOTHER.
2. MINIMUM OUTDOOR OPERATING AMBIENT IN COOLING MODE IS 55°F, MAX. 125°F.
3. SERIES DESIGNATION IS THE 13TH POSITION OF THE UNIT MODEL NUMBER.
4. CENTER OF GRAVITY
5. ALL DIMENSIONS ARE IN "INCHES" UNLESS NOTED.

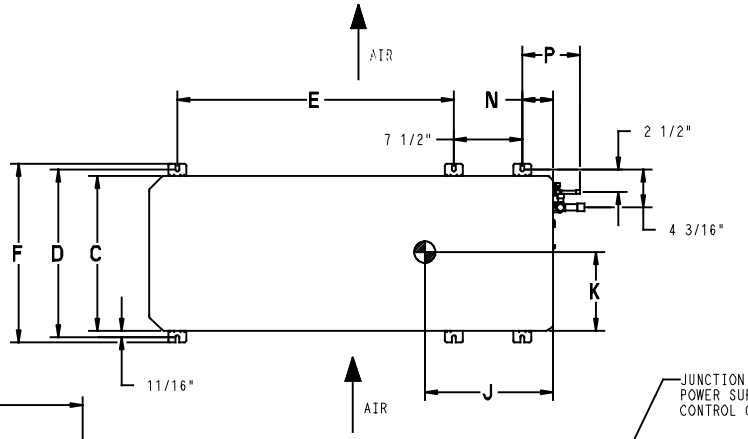

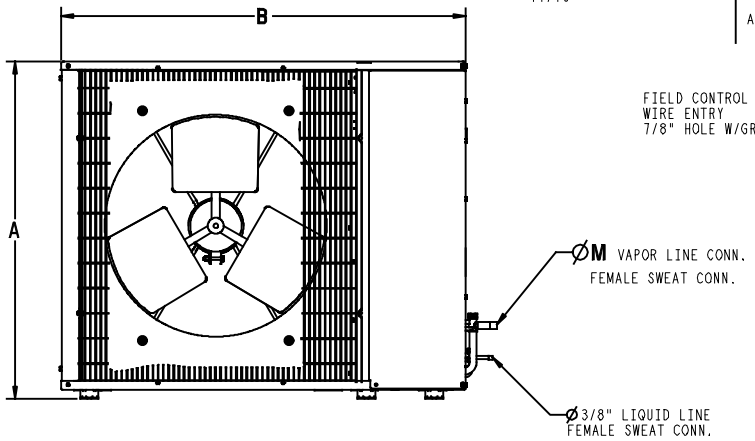

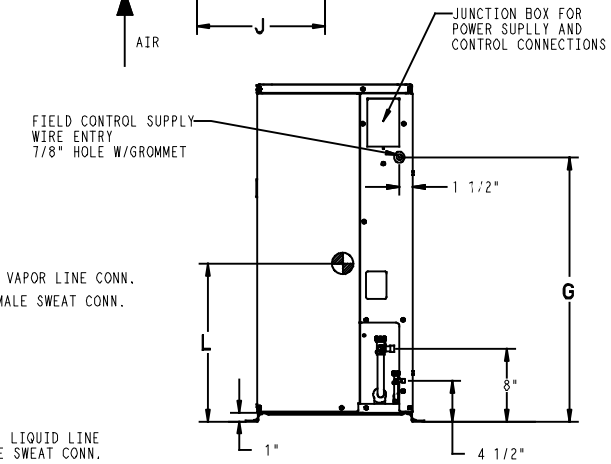

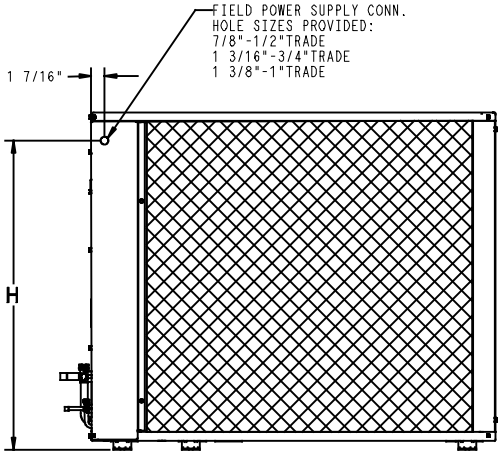

UNIT SIZE	MINIMUM MOUNTING PAD DIMENSIONS
18,24	23" X 42"
30,36,48,60	24" X 50"

DIMENSIONS - SI

UNIT	SERIES	ELECTRICAL CHARACTERISTICS				A	B	C	D	E	F	G	H	J	K	L	M	N	P	OPERATING WEIGHT(KG)	SHIPPING WEIGHT(KG)	SHIPPING DIMENSIONS (L x W x H)
38HDR018	1	X	O	O	O	638.2	938.2	369.9	406.4	595.3	436.6	435.0	558.8	330.2	168.3	285.8	15.9	74.6	152.4	70.4	77.7	1090.2 X 457.7 X 714.3
38HDR024	1,2	X	O	O	O	790.6	938.2	369.9	406.4	595.3	436.6	587.4	711.2	355.6	171.5	295.3	15.9	74.6	152.4	81.8	90.0	1090.2 X 457.7 X 866.7
38HDR030	1	X	O	O	O	944.6	1131.9	433.4	468.3	774.7	498.5	741.4	865.2	347.7	206.4	403.2	19.0	87.3	165.1	90.9	101.4	1282.7 X 520.7 X 1020.7
38HDR036	1	X	O	X	X	944.6	1131.9	433.4	468.3	774.7	498.5	741.4	865.2	347.7	206.4	403.2	19.0	87.3	165.1	99.0	109.0	1282.7 X 520.7 X 1020.7
38HDR048	1,2	X	O	X	X	1097.0	1131.9	433.4	468.3	774.7	498.5	893.8	1017.6	368.3	215.9	479.4	22.2	87.3	165.1	129.0	140.4	1282.7 X 520.7 X 1173.1
38HDR060	1,2	X	O	X	X	1097.0	1131.9	433.4	468.3	774.7	498.5	893.8	1017.6	368.3	215.9	479.4	22.2	87.3	165.1	133.6	145.0	1282.7 X 520.7 X 1173.1

208-230-1-60	230-1-60	208/230-3-60	460-3-60

X = YES
O = NO

1. REQUIRED CLEARANCES: WITH COIL FACING WALL; ALLOW 152.4 MIN CLEARANCE ON COIL SIDE AND COIL END AND 914.4 MIN CLEARANCE ON COMPRESSOR END AND FAN SIDE. WITH FAN FACING WALL; ALLOW 203.2 MIN CLEARANCE ON FAN SIDE AND COIL END AND 914.4 MIN CLEARANCE ON COMPRESSOR END AND COIL SIDE. WITH MULTI UNIT APPLICATION; ARRANGE UNITS SO DISCHARGE OF ONE DOES NOT ENTER INLET OF ANOTHER.
2. MINIMUM OUTDOOR OPERATING AMBIENT IN COOLING MODE IS 12.8°C, MAX. 51.7°C.
3. SERIES DESIGNATION IS THE 13TH POSITION OF THE UNIT MODEL NUMBER.
4. CENTER OF GRAVITY
5. ALL DIMENSIONS ARE IN "MM" UNLESS NOTED.

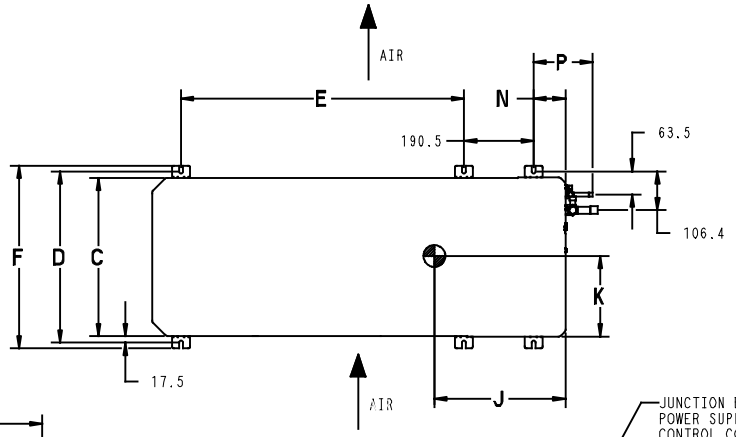

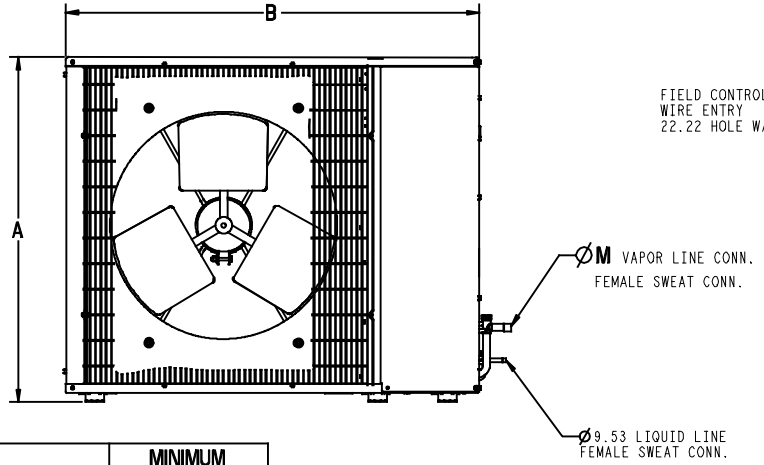

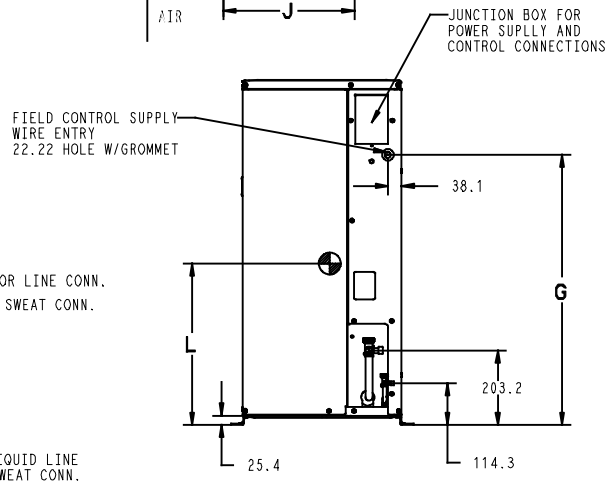

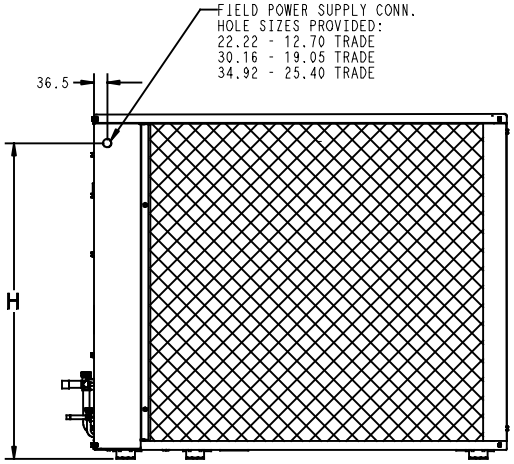

UNIT SIZE	MINIMUM MOUNTING PAD DIMENSIONS
18,24	584.2 X 1066.8
30,36,48,60	609.6 X 1270.0

COMBINATION RATINGS

ARI Ref. No.	Model Number	Indoor Model	Furnace Model	Capacity	EER	SEER
1085392	38HDR018−31	†CNPV*1814A**+TDR		17,000	11.0	13.0
1117974	38HDR018−31	40QAC024−−−3		18,000	11.5	13.0
1085396	38HDR018−31	CAP**1814A**	58CV(A,X)070−12	17,000	11.5	14.0
3015375	38HDR018−31	CAP**1814A**	58PH*045−08	17,000	11.5	14.0
1085394	38HDR018−31	CAP**1814A**+TDR		17,000	10.9	13.0
1085400	38HDR018−31	CAP**2414A**	58CV(A,X)070−12	17,400	11.5	14.0
3015376	38HDR018−31	CAP**2414A**	58PH*045−08	17,400	12.0	14.5
1085398	38HDR018−31	CAP**2414A**+TDR		17,400	11.0	13.0
1085456	38HDR018−31	CAP**2417A**	58CV(A,X)070−12	17,400	11.5	14.0
1085406	38HDR018−31	CAP**2417A**	58CV(A,X)090−16	17,400	11.5	14.0
3112072	38HDR018−31	CAP**2417A**	58MEB040−12	17,400	12.0	14.5
3112073	38HDR018−31	CAP**2417A**	58MEB060−12	17,400	12.0	14.5
1390388	38HDR018−31	CAP**2417A**	58MV(B,C)060−14	17,400	11.5	14.0
1085402	38HDR018−31	CAP**2417A**+TDR		17,400	11.0	13.0
1085432	38HDR018−31	CNPF*2418A**+TDR		17,400	11.0	13.0
1085428	38HDR018−31	CNPH*2417A**	58CV(A,X)070−12	17,400	11.5	14.0
1085430	38HDR018−31	CNPH*2417A**	58CV(A,X)090−16	17,400	11.5	14.0
3112076	38HDR018−31	CNPH*2417A**	58MEB040−12	17,400	12.0	14.5
3112077	38HDR018−31	CNPH*2417A**	58MEB060−12	17,400	12.0	14.5
1390392	38HDR018−31	CNPH*2417A**	58MV(B,C)060−14	17,400	11.5	14.0
1390396	38HDR018−31	CNPH*2417A**	58MV(B,C)080−14	17,400	11.5	14.0
3015379	38HDR018−31	CNPH*2417A**	58PH*045−08	17,400	12.0	14.5
1085420	38HDR018−31	CNPH*2417A**+TDR		17,400	11.0	13.0
1085408	38HDR018−31	CNPV*1814A**	58CV(A,X)070−12	17,000	11.5	14.0
3015377	38HDR018−31	CNPV*1814A**	58PH*045−08	17,000	11.5	14.0
1085412	38HDR018−31	CNPV*2414A**	58CV(A,X)070−12	17,400	11.5	14.0
3015378	38HDR018−31	CNPV*2414A**	58PH*045−08	17,400	12.0	14.5
1085410	38HDR018−31	CNPV*2414A**+TDR		17,400	11.0	13.0
1085458	38HDR018−31	CNPV*2417A**	58CV(A,X)070−12	17,400	11.5	14.0
1085418	38HDR018−31	CNPV*2417A**	58CV(A,X)090−16	17,400	11.5	14.0
3112074	38HDR018−31	CNPV*2417A**	58MEB040−12	17,400	12.0	14.5
3112075	38HDR018−31	CNPV*2417A**	58MEB060−12	17,400	12.0	14.5
1390390	38HDR018−31	CNPV*2417A**	58MV(B,C)060−14	17,400	11.5	14.0
1085414	38HDR018−31	CNPV*2417A**+TDR		17,400	11.0	13.0
1085442	38HDR018−31	CSPH*2412A**	58CV(A,X)070−12	17,400	11.5	14.0
1085444	38HDR018−31	CSPH*2412A**	58CV(A,X)090−16	17,400	11.5	14.0
3112078	38HDR018−31	CSPH*2412A**	58MEB040−12	17,400	12.0	14.5
3112079	38HDR018−31	CSPH*2412A**	58MEB060−12	17,400	12.0	14.5
1390394	38HDR018−31	CSPH*2412A**	58MV(B,C)060−14	17,400	11.5	14.0
1390398	38HDR018−31	CSPH*2412A**	58MV(B,C)080−14	17,400	11.5	14.0
3015380	38HDR018−31	CSPH*2412A**	58PH*045−08	17,400	12.0	14.5
1085434	38HDR018−31	CSPH*2412A**+TDR		17,400	11.0	13.0
1086232	38HDR018−31	FE4ANF002+UI		17,400	11.5	14.0
1085450	38HDR018−31	FF1ENP018		17,400	11.0	13.0
1085452	38HDR018−31	FF1ENP024		17,400	11.0	13.0
1085454	38HDR018−31	FV4BNF002		17,400	11.5	14.0
3404623	38HDR018−31	FV4CNF002		17,400	11.5	14.0
1085446	38HDR018−31	FX4CNF018		17,000	11.5	14.0
1085448	38HDR018−31	FX4CNF024		17,400	11.5	14.0
3465486	38HDR024−32	†CNPV*2414A**+TDR		23,400	11.0	13.0
3465806	38HDR024−32	40QAC024−3		22,800	11.5	13.0
3465488	38HDR024−32	CAP**2414A**	58CV(A,X)070−12	23,400	11.5	14.0
3465489	38HDR024−32	CAP**2414A**	58PH*045−08	23,400	11.5	14.0
3465487	38HDR024−32	CAP**2414A**+TDR		23,400	11.0	13.0
3465492	38HDR024−32	CAP**2417A**	58CV(A,X)090−16	23,400	11.5	14.0
3465493	38HDR024−32	CAP**2417A**	58MEB040−12	23,400	12.0	14.5
3465494	38HDR024−32	CAP**2417A**	58MEB060−12	23,400	12.0	14.5
3465495	38HDR024−32	CAP**2417A**	58MEB080−12	23,400	12.0	14.5
3465491	38HDR024−32	CAP**2417A**	58MV(B,C)060−14	23,400	11.5	14.0
3465490	38HDR024−32	CAP**2417A**+TDR		23,400	11.0	13.0
3465497	38HDR024−32	CAP**3014A**	58CV(A,X)070−12	23,400	11.5	14.0
3465498	38HDR024−32	CAP**3014A**	58PH*045−08	23,600	12.0	14.5
3465496	38HDR024−32	CAP**3014A**+TDR		23,600	11.0	13.0
3465501	38HDR024−32	CAP**3017A**	58CV(A,X)090−16	23,600	11.5	14.0
3465502	38HDR024−32	CAP**3017A**	58MEB040−12	23,600	12.0	14.5
3465503	38HDR024−32	CAP**3017A**	58MEB060−12	23,600	12.0	14.5
3465504	38HDR024−32	CAP**3017A**	58MEB080−12	23,600	12.0	14.5
3465500	38HDR024−32	CAP**3017A**	58MV(B,C)060−14	23,600	11.5	14.0
3465499	38HDR024−32	CAP**3017A**+TDR		23,600	11.0	13.0
3465554	38HDR024−32	CNPF*2418A**+TDR		23,400	11.0	13.0
3465529	38HDR024−32	CNPH*2417A**	58CV(A,X)070−12	23,400	11.5	14.0
3465530	38HDR024−32	CNPH*2417A**	58CV(A,X)090−16	23,400	11.5	14.0
3465531	38HDR024−32	CNPH*2417A**	58CV(A,X)110−20	23,400	11.5	14.0
3465532	38HDR024−32	CNPH*2417A**	58CV(A,X)135−22	23,400	11.5	14.0
3465533	38HDR024−32	CNPH*2417A**	58CV(A,X)155−22	23,400	11.5	14.0
3465535	38HDR024−32	CNPH*2417A**	58MEB040−12	23,400	12.0	14.5
3465536	38HDR024−32	CNPH*2417A**	58MEB060−12	23,400	12.0	14.5
3465537	38HDR024−32	CNPH*2417A**	58MEB080−12	23,400	12.0	14.5

See notes on page 26

COMBINATION RATINGS (CONT.)

ARI Ref. No.	Model Number	Indoor Model	Furnace Model	Capacity	EER	SEER
3465524	38HDR024−32	CNPH*2417A**	58MV(B,C)060−14	23,400	11.5	14.0
3465525	38HDR024−32	CNPH*2417A**	58MV(B,C)080−14	23,400	11.5	14.0
3465526	38HDR024−32	CNPH*2417A**	58MV(B,C)080−20	23,200	11.5	14.0
3465527	38HDR024−32	CNPH*2417A**	58MV(B,C)100−20	23,400	11.5	14.0
3465528	38HDR024−32	CNPH*2417A**	58MV(B,C)120−20	23,400	11.5	14.0
3465523	38HDR024−32	CNPH*2417A**	58MVB040−14	23,400	11.5	14.0
3465534	38HDR024−32	CNPH*2417A**	58PH*045−08	23,400	11.5	14.0
3465522	38HDR024−32	CNPH*2417A**+TDR		23,400	11.0	13.0
3465545	38HDR024−32	CNPH*3017A**	58CV(A,X)070−12	23,400	11.5	14.0
3465546	38HDR024−32	CNPH*3017A**	58CV(A,X)090−16	23,600	11.5	14.0
3465547	38HDR024−32	CNPH*3017A**	58CV(A,X)110−20	23,600	11.5	14.0
3465548	38HDR024−32	CNPH*3017A**	58CV(A,X)135−22	23,600	11.5	14.0
3465549	38HDR024−32	CNPH*3017A**	58CV(A,X)155−22	23,600	11.5	14.0
3465551	38HDR024−32	CNPH*3017A**	58MEB040−12	23,600	12.0	14.5
3465552	38HDR024−32	CNPH*3017A**	58MEB060−12	23,600	12.0	14.5
3465553	38HDR024−32	CNPH*3017A**	58MEB080−12	23,600	12.0	14.5
3465540	38HDR024−32	CNPH*3017A**	58MV(B,C)060−14	23,600	11.5	14.0
3465541	38HDR024−32	CNPH*3017A**	58MV(B,C)080−14	23,400	11.5	14.0
3465542	38HDR024−32	CNPH*3017A**	58MV(B,C)080−20	23,400	11.5	14.0
3465543	38HDR024−32	CNPH*3017A**	58MV(B,C)100−20	23,600	11.5	14.0
3465544	38HDR024−32	CNPH*3017A**	58MV(B,C)120−20	23,600	11.5	14.0
3465539	38HDR024−32	CNPH*3017A**	58MVB040−14	23,600	11.5	14.0
3465550	38HDR024−32	CNPH*3017A**	58PH*045−08	23,600	12.0	14.5
3465538	38HDR024−32	CNPH*3017A**+TDR		23,600	11.0	13.0
3465505	38HDR024−32	CNPV*2414A**	58CV(A,X)070−12	23,400	11.5	14.0
3465506	38HDR024−32	CNPV*2414A**	58PH*045−08	23,400	11.5	14.0
3465509	38HDR024−32	CNPV*2417A**	58CV(A,X)090−16	23,400	11.5	14.0
3465510	38HDR024−32	CNPV*2417A**	58MEB040−12	23,400	12.0	14.5
3465511	38HDR024−32	CNPV*2417A**	58MEB060−12	23,400	12.0	14.5
3465512	38HDR024−32	CNPV*2417A**	58MEB080−12	23,400	12.0	14.5
3465508	38HDR024−32	CNPV*2417A**	58MV(B,C)060−14	23,400	11.5	14.0
3465507	38HDR024−32	CNPV*2417A**+TDR		23,400	11.0	13.0
3465514	38HDR024−32	CNPV*3014A**	58CV(A,X)070−12	23,400	11.5	14.0
3465515	38HDR024−32	CNPV*3014A**	58PH*045−08	23,600	11.5	14.0
3465513	38HDR024−32	CNPV*3014A**+TDR		23,600	11.0	13.0
3465518	38HDR024−32	CNPV*3017A**	58CV(A,X)090−16	23,600	11.5	14.0
3465519	38HDR024−32	CNPV*3017A**	58MEB040−12	23,600	12.0	14.5
3465520	38HDR024−32	CNPV*3017A**	58MEB060−12	23,600	12.0	14.5
3465521	38HDR024−32	CNPV*3017A**	58MEB080−12	23,600	12.0	14.5
3465517	38HDR024−32	CNPV*3017A**	58MV(B,C)060−14	23,600	11.5	14.0
3465516	38HDR024−32	CNPV*3017A**+TDR		23,600	11.0	13.0
3465562	38HDR024−32	CSPH*2412A**	58CV(A,X)070−12	23,400	11.5	14.0
3465563	38HDR024−32	CSPH*2412A**	58CV(A,X)090−16	23,400	11.5	14.0
3465564	38HDR024−32	CSPH*2412A**	58CV(A,X)110−20	23,400	11.5	14.0
3465565	38HDR024−32	CSPH*2412A**	58CV(A,X)135−22	23,400	11.5	14.0
3465566	38HDR024−32	CSPH*2412A**	58CV(A,X)155−22	23,400	11.5	14.0
3465568	38HDR024−32	CSPH*2412A**	58MEB040−12	23,400	12.0	14.5
3465569	38HDR024−32	CSPH*2412A**	58MEB060−12	23,400	12.0	14.5
3465570	38HDR024−32	CSPH*2412A**	58MEB080−12	23,400	12.0	14.5
3465557	38HDR024−32	CSPH*2412A**	58MV(B,C)060−14	23,400	11.5	14.0
3465558	38HDR024−32	CSPH*2412A**	58MV(B,C)080−14	23,400	11.5	14.0
3465559	38HDR024−32	CSPH*2412A**	58MV(B,C)080−20	23,400	11.5	14.0
3465560	38HDR024−32	CSPH*2412A**	58MV(B,C)100−20	23,400	11.5	14.0
3465561	38HDR024−32	CSPH*2412A**	58MV(B,C)120−20	23,400	11.5	14.0
3465556	38HDR024−32	CSPH*2412A**	58MVB040−14	23,400	11.5	14.0
3465567	38HDR024−32	CSPH*2412A**	58PH*045−08	23,400	11.5	14.0
3465555	38HDR024−32	CSPH*2412A**+TDR		23,400	11.0	13.0
3465578	38HDR024−32	CSPH*3012A**	58CV(A,X)070−12	23,600	11.5	14.0
3465579	38HDR024−32	CSPH*3012A**	58CV(A,X)090−16	23,600	11.5	14.0
3465580	38HDR024−32	CSPH*3012A**	58CV(A,X)110−20	23,600	11.5	14.0
3465581	38HDR024−32	CSPH*3012A**	58CV(A,X)135−22	23,600	11.5	14.0
3465582	38HDR024−32	CSPH*3012A**	58CV(A,X)155−22	23,600	11.5	14.0
3465584	38HDR024−32	CSPH*3012A**	58MEB040−12	23,600	12.0	14.5
3465585	38HDR024−32	CSPH*3012A**	58MEB060−12	23,600	12.0	14.5
3465586	38HDR024−32	CSPH*3012A**	58MEB080−12	23,600	12.0	14.5
3465573	38HDR024−32	CSPH*3012A**	58MV(B,C)060−14	23,600	11.5	14.0
3465574	38HDR024−32	CSPH*3012A**	58MV(B,C)080−14	23,600	11.5	14.0
3465575	38HDR024−32	CSPH*3012A**	58MV(B,C)080−20	23,400	11.5	14.0
3465576	38HDR024−32	CSPH*3012A**	58MV(B,C)100−20	23,600	11.5	14.0
3465577	38HDR024−32	CSPH*3012A**	58MV(B,C)120−20	23,600	11.5	14.0
3465572	38HDR024−32	CSPH*3012A**	58MVB040−14	23,600	11.5	14.0
3465583	38HDR024−32	CSPH*3012A**	58PH*045−08	23,600	12.0	14.5
3465571	38HDR024−32	CSPH*3012A**+TDR		23,600	11.0	13.0
3465594	38HDR024−32	FE4AN(B,F)003+UI		23,800	12.0	14.5
3465592	38HDR024−32	FE4ANF002+UI		23,600	12.0	14.5
3465596	38HDR024−32	FE5ANB004+UI		24,000	12.0	14.5
3465597	38HDR024−32	FF1ENP024		22,800	11.0	13.0
3465606	38HDR024−32	FF1ENP025		23,400	11.5	14.0
3465600	38HDR024−32	FF1ENP030		23,000	11.0	13.0

See notes on page 26

COMBINATION RATINGS (CONT.)

ARI Ref. No.	Model Number	Indoor Model	Furnace Model	Capacity	EER	SEER
3465608	38HDR024−32	FF1ENP031		23,600	11.5	14.0
3465609	38HDR024−32	FF1ENP037		23,800	11.5	14.0
3465603	38HDR024−32	FV4BN(B,F)003		23,800	12.0	14.5
3465601	38HDR024−32	FV4BNF002		23,600	12.0	14.5
3465613	38HDR024−32	FV4CN(B,F)003		23,800	12.0	14.5
3465611	38HDR024−32	FV4CNF002		23,600	12.0	14.5
3465589	38HDR024−32	FX4CNF024		23,400	11.5	14.0
3465590	38HDR024−32	FX4CNF030		23,800	11.5	14.0
3465587	38HDR024−32	FY4ANF024		23,200	11.0	13.0
3465588	38HDR024−32	FY4ANF030		23,600	11.0	13.0
1085620	38HDR030−31	†CNPV*3014A**+TDR		28,000	11.0	13.0
1117978	38HDR030−31	40QAC036−−−3		29,000	12.0	13.0
1085624	38HDR030−31	CAP**3014A**	58CV(A,X)070−12	28,000	11.5	14.0
1085622	38HDR030−31	CAP**3014A**+TDR		28,000	11.0	13.0
1085788	38HDR030−31	CAP**3017A**	58CV(A,X)070−12	28,000	11.5	14.0
1085630	38HDR030−31	CAP**3017A**	58CV(A,X)090−16	28,000	11.5	14.0
3112104	38HDR030−31	CAP**3017A**	58MEB040−12	28,000	12.0	14.5
3112105	38HDR030−31	CAP**3017A**	58MEB060−12	28,000	12.0	14.5
3112106	38HDR030−31	CAP**3017A**	58MEB080−12	28,000	12.0	14.5
3112107	38HDR030−31	CAP**3017A**	58MEB080−16	28,000	12.0	14.5
1390448	38HDR030−31	CAP**3017A**	58MV(B,C)060−14	28,000	11.5	14.0
3015389	38HDR030−31	CAP**3017A**	58PH*070−16	28,000	11.5	14.0
1085626	38HDR030−31	CAP**3017A**+TDR		28,000	11.0	13.0
1085634	38HDR030−31	CAP**3614A**	58CV(A,X)070−12	28,600	11.5	14.0
1085632	38HDR030−31	CAP**3614A**+TDR		28,600	11.0	13.0
1085790	38HDR030−31	CAP**3617A**	58CV(A,X)070−12	28,600	11.5	14.0
1085640	38HDR030−31	CAP**3617A**	58CV(A,X)090−16	28,600	11.5	14.0
3112108	38HDR030−31	CAP**3617A**	58MEB040−12	28,600	12.0	14.5
3112109	38HDR030−31	CAP**3617A**	58MEB060−12	28,600	12.0	14.5
3112110	38HDR030−31	CAP**3617A**	58MEB080−12	28,600	12.0	14.5
3112111	38HDR030−31	CAP**3617A**	58MEB080−16	28,600	12.0	14.5
1390450	38HDR030−31	CAP**3617A**	58MV(B,C)060−14	28,600	11.5	14.0
3015390	38HDR030−31	CAP**3617A**	58PH*070−16	28,600	12.0	14.5
1085636	38HDR030−31	CAP**3617A**+TDR		28,600	11.0	13.0
1085794	38HDR030−31	CAP**3621A**	58CV(A,X)090−16	28,600	11.5	14.0
1085650	38HDR030−31	CAP**3621A**	58CV(A,X)110−20	28,600	11.5	14.0
1390464	38HDR030−31	CAP**3621A**	58MV(B,C)060−14	28,600	11.5	14.0
1390468	38HDR030−31	CAP**3621A**	58MV(B,C)080−14	28,600	11.5	14.0
1390480	38HDR030−31	CAP**3621A**	58MV(B,C)080−20	28,600	11.5	14.0
1390492	38HDR030−31	CAP**3621A**	58MV(B,C)100−20	28,600	11.5	14.0
3015391	38HDR030−31	CAP**3621A**	58PH*090−16	28,600	12.0	14.5
1085642	38HDR030−31	CAP**3621A**+TDR		28,600	11.0	13.0
1085724	38HDR030−31	CNPF*3618A**+TDR		28,600	11.0	13.0
1085690	38HDR030−31	CNPH*3017A**	58CV(A,X)070−12	28,000	11.5	14.0
1085692	38HDR030−31	CNPH*3017A**	58CV(A,X)090−16	28,000	11.5	14.0
1085694	38HDR030−31	CNPH*3017A**	58CV(A,X)110−20	28,000	11.5	14.0
1085696	38HDR030−31	CNPH*3017A**	58CV(A,X)135−22	28,000	11.5	14.0
1085698	38HDR030−31	CNPH*3017A**	58CV(A,X)155−22	28,000	11.5	14.0
3112120	38HDR030−31	CNPH*3017A**	58MEB040−12	28,000	12.0	14.5
3112121	38HDR030−31	CNPH*3017A**	58MEB060−12	28,000	12.0	14.5
3112122	38HDR030−31	CNPH*3017A**	58MEB080−12	28,000	12.0	14.5
3112123	38HDR030−31	CNPH*3017A**	58MEB080−16	28,000	12.0	14.5
1390456	38HDR030−31	CNPH*3017A**	58MV(B,C)060−14	28,000	11.5	14.0
1390472	38HDR030−31	CNPH*3017A**	58MV(B,C)080−14	28,000	11.5	14.0
1390484	38HDR030−31	CNPH*3017A**	58MV(B,C)080−20	28,000	11.5	14.0
1390496	38HDR030−31	CNPH*3017A**	58MV(B,C)100−20	28,000	11.5	14.0
1390504	38HDR030−31	CNPH*3017A**	58MV(B,C)120−20	28,000	11.5	14.0
3015395	38HDR030−31	CNPH*3017A**	58PH*070−16	28,000	11.5	14.0
3015396	38HDR030−31	CNPH*3017A**	58PH*090−16	28,000	11.5	14.0
1085676	38HDR030−31	CNPH*3017A**+TDR		28,000	11.0	13.0
1085714	38HDR030−31	CNPH*3617A**	58CV(A,X)070−12	28,600	11.5	14.0
1085716	38HDR030−31	CNPH*3617A**	58CV(A,X)090−16	28,600	11.5	14.0
1085718	38HDR030−31	CNPH*3617A**	58CV(A,X)110−20	28,600	11.5	14.0
1085720	38HDR030−31	CNPH*3617A**	58CV(A,X)135−22	28,600	11.5	14.0
1085722	38HDR030−31	CNPH*3617A**	58CV(A,X)155−22	28,600	11.5	14.0
3112124	38HDR030−31	CNPH*3617A**	58MEB040−12	28,600	12.0	14.5
3112125	38HDR030−31	CNPH*3617A**	58MEB060−12	28,600	12.0	14.5
3112126	38HDR030−31	CNPH*3617A**	58MEB080−12	28,600	12.0	14.5
3112127	38HDR030−31	CNPH*3617A**	58MEB080−16	28,600	12.0	14.5
1390458	38HDR030−31	CNPH*3617A**	58MV(B,C)060−14	28,600	11.5	14.0
1390474	38HDR030−31	CNPH*3617A**	58MV(B,C)080−14	28,600	11.5	14.0
1390486	38HDR030−31	CNPH*3617A**	58MV(B,C)080−20	28,600	11.5	14.0
1390498	38HDR030−31	CNPH*3617A**	58MV(B,C)100−20	28,600	11.5	14.0
1390506	38HDR030−31	CNPH*3617A**	58MV(B,C)120−20	28,600	11.5	14.0
3015397	38HDR030−31	CNPH*3617A**	58PH*070−16	28,600	12.0	14.5
3015398	38HDR030−31	CNPH*3617A**	58PH*090−16	28,600	12.0	14.5
1085700	38HDR030−31	CNPH*3617A**+TDR		28,600	11.0	13.0
1085652	38HDR030−31	CNPV*3014A**	58CV(A,X)070−12	28,000	11.5	14.0

See notes on page 26

COMBINATION RATINGS (CONT.)

ARI Ref. No.	Model Number	Indoor Model	Furnace Model	Capacity	EER	SEER
1085796	38HDR030−31	CNPV*3017A**	58CV(A,X)070−12	28,000	11.5	14.0
1085658	38HDR030−31	CNPV*3017A**	58CV(A,X)090−16	28,000	11.5	14.0
3112112	38HDR030−31	CNPV*3017A**	58MEB040−12	28,000	12.0	14.5
3112113	38HDR030−31	CNPV*3017A**	58MEB060−12	28,000	12.0	14.5
3112114	38HDR030−31	CNPV*3017A**	58MEB080−12	28,000	12.0	14.5
3112115	38HDR030−31	CNPV*3017A**	58MEB080−16	28,000	12.0	14.5
1390452	38HDR030−31	CNPV*3017A**	58MV(B,C)060−14	28,000	11.5	14.0
3015392	38HDR030−31	CNPV*3017A**	58PH*070−16	28,000	11.5	14.0
1085654	38HDR030−31	CNPV*3017A**+TDR		28,000	11.0	13.0
1085798	38HDR030−31	CNPV*3617A**	58CV(A,X)070−12	28,600	11.5	14.0
1085664	38HDR030−31	CNPV*3617A**	58CV(A,X)090−16	28,600	11.5	14.0
3112116	38HDR030−31	CNPV*3617A**	58MEB040−12	28,600	12.0	14.5
3112117	38HDR030−31	CNPV*3617A**	58MEB060−12	28,600	12.0	14.5
3112118	38HDR030−31	CNPV*3617A**	58MEB080−12	28,600	12.0	14.5
3112119	38HDR030−31	CNPV*3617A**	58MEB080−16	28,600	12.0	14.5
1390454	38HDR030−31	CNPV*3617A**	58MV(B,C)060−14	28,600	11.5	14.0
3015393	38HDR030−31	CNPV*3617A**	58PH*070−16	28,600	12.0	14.5
1085660	38HDR030−31	CNPV*3617A**+TDR		28,600	11.0	13.0
1085802	38HDR030−31	CNPV*3621A**	58CV(A,X)090−16	28,600	11.5	14.0
1085674	38HDR030−31	CNPV*3621A**	58CV(A,X)110−20	28,600	11.5	14.0
1390466	38HDR030−31	CNPV*3621A**	58MV(B,C)060−14	28,600	11.5	14.0
1390470	38HDR030−31	CNPV*3621A**	58MV(B,C)080−14	28,600	11.5	14.0
1390482	38HDR030−31	CNPV*3621A**	58MV(B,C)080−20	28,600	11.5	14.0
1390494	38HDR030−31	CNPV*3621A**	58MV(B,C)100−20	28,600	11.5	14.0
3015394	38HDR030−31	CNPV*3621A**	58PH*090−16	28,600	12.0	14.5
1085666	38HDR030−31	CNPV*3621A**+TDR		28,600	11.0	13.0
1085740	38HDR030−31	CSPH*3012A**	58CV(A,X)070−12	28,000	11.5	14.0
1085742	38HDR030−31	CSPH*3012A**	58CV(A,X)090−16	28,000	11.5	14.0
1085744	38HDR030−31	CSPH*3012A**	58CV(A,X)110−20	28,000	11.5	14.0
1085746	38HDR030−31	CSPH*3012A**	58CV(A,X)135−22	28,000	11.5	14.0
1085748	38HDR030−31	CSPH*3012A**	58CV(A,X)155−22	28,000	11.5	14.0
3112128	38HDR030−31	CSPH*3012A**	58MEB040−12	28,000	12.0	14.5
3112129	38HDR030−31	CSPH*3012A**	58MEB060−12	28,000	12.0	14.5
3112130	38HDR030−31	CSPH*3012A**	58MEB080−12	28,000	12.0	14.5
3112131	38HDR030−31	CSPH*3012A**	58MEB080−16	28,000	12.0	14.5
1390460	38HDR030−31	CSPH*3012A**	58MV(B,C)060−14	28,000	11.5	14.0
1390476	38HDR030−31	CSPH*3012A**	58MV(B,C)080−14	28,000	11.5	14.0
1390488	38HDR030−31	CSPH*3012A**	58MV(B,C)080−20	28,000	11.5	14.0
1390500	38HDR030−31	CSPH*3012A**	58MV(B,C)100−20	28,000	11.5	14.0
1390508	38HDR030−31	CSPH*3012A**	58MV(B,C)120−20	28,000	11.5	14.0
3015399	38HDR030−31	CSPH*3012A**	58PH*070−16	28,000	11.5	14.0
3015400	38HDR030−31	CSPH*3012A**	58PH*090−16	28,000	11.5	14.0
1085726	38HDR030−31	CSPH*3012A**+TDR		28,000	11.0	13.0
1085764	38HDR030−31	CSPH*3612A**	58CV(A,X)070−12	28,600	11.5	14.0
1085766	38HDR030−31	CSPH*3612A**	58CV(A,X)090−16	28,600	11.5	14.0
1085768	38HDR030−31	CSPH*3612A**	58CV(A,X)110−20	28,600	11.5	14.0
1085770	38HDR030−31	CSPH*3612A**	58CV(A,X)135−22	28,600	11.5	14.0
1085772	38HDR030−31	CSPH*3612A**	58CV(A,X)155−22	28,600	11.5	14.0
3112132	38HDR030−31	CSPH*3612A**	58MEB040−12	28,600	12.0	14.5
3112133	38HDR030−31	CSPH*3612A**	58MEB060−12	28,600	12.0	14.5
3112134	38HDR030−31	CSPH*3612A**	58MEB080−12	28,600	12.0	14.5
3112135	38HDR030−31	CSPH*3612A**	58MEB080−16	28,600	12.0	14.5
1390462	38HDR030−31	CSPH*3612A**	58MV(B,C)060−14	28,600	11.5	14.0
1390478	38HDR030−31	CSPH*3612A**	58MV(B,C)080−14	28,600	11.5	14.0
1390490	38HDR030−31	CSPH*3612A**	58MV(B,C)080−20	28,600	11.5	14.0
1390502	38HDR030−31	CSPH*3612A**	58MV(B,C)100−20	28,600	11.5	14.0
1390510	38HDR030−31	CSPH*3612A**	58MV(B,C)120−20	28,600	11.5	14.0
3015401	38HDR030−31	CSPH*3612A**	58PH*070−16	28,600	12.0	14.5
3015402	38HDR030−31	CSPH*3612A**	58PH*090−16	28,600	12.0	14.5
1085750	38HDR030−31	CSPH*3612A**+TDR		28,600	11.0	13.0
1086240	38HDR030−31	FE4AN(B,F)003+UI		28,600	11.5	14.0
1086242	38HDR030−31	FE4AN(B,F)005+UI		29,000	12.5	15.0
1086238	38HDR030−31	FE4ANF002+UI		28,600	11.5	14.0
1085782	38HDR030−31	FF1ENP030		28,000	11.0	13.0
1085784	38HDR030−31	FF1ENP036		28,600	11.0	13.0
1085786	38HDR030−31	FV4BNF002		28,600	11.5	14.0
3404625	38HDR030−31	FV4CNF002		28,600	11.5	14.0
1085780	38HDR030−31	FX4CN(B,F)036		28,600	11.5	14.0
1085778	38HDR030−31	FX4CNF030		28,000	11.5	14.0
1085774	38HDR030−31	FY4ANF030		28,000	11.0	13.0
1085776	38HDR030−31	FY4ANF036		28,600	11.0	13.0
1085804	38HDR036−31	†CNPV*4221A**+TDR		33,400	11.0	13.0
1117980	38HDR036−31	40QAC036−−−3		33,000	11.4	13.0
1085808	38HDR036−31	CAP**3614A**	58CV(A,X)070−12	32,600	11.5	13.5
3015403	38HDR036−31	CAP**3614A**	58PH*045−08	33,000	11.5	14.0
1085806	38HDR036−31	CAP**3614A**+TDR		32,600	11.0	13.0
1085982	38HDR036−31	CAP**3617A**	58CV(A,X)070−12	33,000	11.5	14.0
1085814	38HDR036−31	CAP**3617A**	58CV(A,X)090−16	33,000	11.5	14.0

See notes on page 26

COMBINATION RATINGS (CONT.)

ARI Ref. No.	Model Number	Indoor Model	Furnace Model	Capacity	EER	SEER
3112136	38HDR036−31	CAP**3617A**	58MEB040−12	33,000	12.0	14.5
3112137	38HDR036−31	CAP**3617A**	58MEB060−12	33,000	12.0	14.5
3112138	38HDR036−31	CAP**3617A**	58MEB080−12	33,000	12.0	14.5
3112139	38HDR036−31	CAP**3617A**	58MEB080−16	33,000	12.0	14.5
1390512	38HDR036−31	CAP**3617A**	58MV(B,C)060−14	33,000	11.5	13.5
3015404	38HDR036−31	CAP**3617A**	58PH*070−16	33,000	11.5	14.0
1085810	38HDR036−31	CAP**3617A**+TDR		33,000	11.0	13.0
1085986	38HDR036−31	CAP**3621A**	58CV(A,X)090−16	33,000	11.5	14.0
1085824	38HDR036−31	CAP**3621A**	58CV(A,X)110−20	33,000	11.5	14.0
3112140	38HDR036−31	CAP**3621A**	58MEB100−20	33,000	12.0	14.5
1390524	38HDR036−31	CAP**3621A**	58MV(B,C)060−14	33,000	11.5	14.0
1390532	38HDR036−31	CAP**3621A**	58MV(B,C)080−14	33,000	11.5	13.5
1390550	38HDR036−31	CAP**3621A**	58MV(B,C)080−20	33,000	11.5	13.5
1390568	38HDR036−31	CAP**3621A**	58MV(B,C)100−20	33,000	11.5	14.0
3015405	38HDR036−31	CAP**3621A**	58PH*090−16	33,000	12.0	14.5
3015406	38HDR036−31	CAP**3621A**	58PH*110−20	33,000	12.0	14.5
1085816	38HDR036−31	CAP**3621A**+TDR		33,000	11.0	13.0
1085990	38HDR036−31	CAP**4221A**	58CV(A,X)090−16	33,400	11.5	14.0
1085834	38HDR036−31	CAP**4221A**	58CV(A,X)110−20	33,400	11.5	14.0
3112141	38HDR036−31	CAP**4221A**	58MEB100−20	33,400	12.0	14.5
1390526	38HDR036−31	CAP**4221A**	58MV(B,C)060−14	33,400	11.5	14.0
1390534	38HDR036−31	CAP**4221A**	58MV(B,C)080−14	33,400	11.5	13.5
1390552	38HDR036−31	CAP**4221A**	58MV(B,C)080−20	33,400	11.5	14.0
1390570	38HDR036−31	CAP**4221A**	58MV(B,C)100−20	33,400	11.5	14.0
3015407	38HDR036−31	CAP**4221A**	58PH*090−16	33,400	12.0	14.5
3015408	38HDR036−31	CAP**4221A**	58PH*110−20	33,400	12.0	14.5
1085826	38HDR036−31	CAP**4221A**+TDR		33,400	11.0	13.0
1085998	38HDR036−31	CAP**4224A**	58CV(A,X)110−20	33,400	11.5	14.0
1085842	38HDR036−31	CAP**4224A**	58CV(A,X)135−22	33,400	11.5	14.0
1085844	38HDR036−31	CAP**4224A**	58CV(A,X)155−22	33,400	11.5	14.0
1390548	38HDR036−31	CAP**4224A**	58MV(B,C)080−14	33,400	11.5	14.0
1390566	38HDR036−31	CAP**4224A**	58MV(B,C)080−20	33,400	11.5	14.0
1390584	38HDR036−31	CAP**4224A**	58MV(B,C)100−20	33,400	11.5	14.0
1390586	38HDR036−31	CAP**4224A**	58MV(B,C)120−20	33,400	11.5	13.5
1085836	38HDR036−31	CAP**4224A**+TDR		33,400	11.0	13.0
1085918	38HDR036−31	CNPF*3618A**+TDR		33,000	11.0	13.0
1085884	38HDR036−31	CNPH*3617A**	58CV(A,X)070−12	33,000	11.5	13.5
1085886	38HDR036−31	CNPH*3617A**	58CV(A,X)090−16	33,000	11.5	13.5
1085888	38HDR036−31	CNPH*3617A**	58CV(A,X)110−20	33,000	11.5	13.5
1085890	38HDR036−31	CNPH*3617A**	58CV(A,X)135−22	33,000	11.5	13.5
1085892	38HDR036−31	CNPH*3617A**	58CV(A,X)155−22	33,000	11.5	14.0
3112156	38HDR036−31	CNPH*3617A**	58MEB040−12	33,000	12.0	14.5
3112157	38HDR036−31	CNPH*3617A**	58MEB060−12	33,000	12.0	14.5
3112158	38HDR036−31	CNPH*3617A**	58MEB080−12	33,000	12.0	14.5
3112159	38HDR036−31	CNPH*3617A**	58MEB080−16	33,000	12.0	14.5
3112160	38HDR036−31	CNPH*3617A**	58MEB100−20	33,000	12.0	14.5
1390516	38HDR036−31	CNPH*3617A**	58MV(B,C)060−14	33,000	11.5	13.5
1390540	38HDR036−31	CNPH*3617A**	58MV(B,C)080−14	33,000	11.5	13.5
1390558	38HDR036−31	CNPH*3617A**	58MV(B,C)080−20	33,000	11.5	13.5
1390576	38HDR036−31	CNPH*3617A**	58MV(B,C)100−20	33,000	11.5	13.5
1390588	38HDR036−31	CNPH*3617A**	58MV(B,C)120−20	33,000	11.5	13.5
3015414	38HDR036−31	CNPH*3617A**	58PH*045−08	33,000	11.5	14.0
3015415	38HDR036−31	CNPH*3617A**	58PH*070−16	33,000	11.5	14.0
3015416	38HDR036−31	CNPH*3617A**	58PH*090−16	33,000	12.0	14.5
3015417	38HDR036−31	CNPH*3617A**	58PH*110−20	33,000	12.0	14.5
1085870	38HDR036−31	CNPH*3617A**+TDR		33,000	11.0	13.0
1085908	38HDR036−31	CNPH*4221A**	58CV(A,X)070−12	33,400	11.5	14.0
1085910	38HDR036−31	CNPH*4221A**	58CV(A,X)090−16	33,400	11.5	14.5
1085912	38HDR036−31	CNPH*4221A**	58CV(A,X)110−20	33,400	11.5	14.5
1085914	38HDR036−31	CNPH*4221A**	58CV(A,X)135−22	33,400	11.5	14.5
1085916	38HDR036−31	CNPH*4221A**	58CV(A,X)155−22	33,400	11.5	14.5
3112161	38HDR036−31	CNPH*4221A**	58MEB040−12	33,400	12.0	14.5
3112162	38HDR036−31	CNPH*4221A**	58MEB060−12	33,400	12.0	14.5
3112163	38HDR036−31	CNPH*4221A**	58MEB080−12	33,400	12.0	14.5
3112164	38HDR036−31	CNPH*4221A**	58MEB080−16	33,400	12.0	14.5
3112165	38HDR036−31	CNPH*4221A**	58MEB100−20	33,400	12.0	14.5
1390518	38HDR036−31	CNPH*4221A**	58MV(B,C)060−14	33,400	11.5	14.0
1390542	38HDR036−31	CNPH*4221A**	58MV(B,C)080−14	33,400	11.5	14.0
1390560	38HDR036−31	CNPH*4221A**	58MV(B,C)080−20	33,400	11.5	14.0
1390578	38HDR036−31	CNPH*4221A**	58MV(B,C)100−20	33,400	11.5	14.0
1390590	38HDR036−31	CNPH*4221A**	58MV(B,C)120−20	33,400	11.5	14.5
3015418	38HDR036−31	CNPH*4221A**	58PH*045−08	33,400	11.5	14.0
3015419	38HDR036−31	CNPH*4221A**	58PH*070−16	33,400	11.5	14.0
3015420	38HDR036−31	CNPH*4221A**	58PH*090−16	33,400	12.0	14.5
3015421	38HDR036−31	CNPH*4221A**	58PH*110−20	33,400	12.0	14.5
1085894	38HDR036−31	CNPH*4221A**+TDR		33,400	11.0	13.0
1086000	38HDR036−31	CNPV*3617A**	58CV(A,X)070−12	33,000	11.5	14.0
1085850	38HDR036−31	CNPV*3617A**	58CV(A,X)090−16	33,000	11.5	13.5
3112142	38HDR036−31	CNPV*3617A**	58MEB040−12	33,000	12.0	14.5

See notes on page 26

COMBINATION RATINGS (CONT.)

ARI Ref. No.	Model Number	Indoor Model	Furnace Model	Capacity	EER	SEER
3112143	38HDR036−31	CNPV*3617A**	58MEB060−12	33,000	12.0	14.5
3112144	38HDR036−31	CNPV*3617A**	58MEB080−12	33,000	12.0	14.5
3112145	38HDR036−31	CNPV*3617A**	58MEB080−16	33,000	12.0	14.5
1390514	38HDR036−31	CNPV*3617A**	58MV(B,C)060−14	33,000	11.5	13.5
3015409	38HDR036−31	CNPV*3617A**	58PH*070−16	33,000	11.5	14.0
1085846	38HDR036−31	CNPV*3617A**+TDR		33,000	11.0	13.0
1086004	38HDR036−31	CNPV*3621A**	58CV(A,X)090−16	33,000	11.5	14.5
1085860	38HDR036−31	CNPV*3621A**	58CV(A,X)110−20	33,000	11.5	13.5
3112146	38HDR036−31	CNPV*3621A**	58MEB100−20	33,000	12.0	14.5
1390528	38HDR036−31	CNPV*3621A**	58MV(B,C)060−14	33,000	11.5	14.5
1390536	38HDR036−31	CNPV*3621A**	58MV(B,C)080−14	33,000	11.5	13.5
1390554	38HDR036−31	CNPV*3621A**	58MV(B,C)080−20	33,000	11.5	13.5
1390572	38HDR036−31	CNPV*3621A**	58MV(B,C)100−20	33,000	11.5	13.5
3015410	38HDR036−31	CNPV*3621A**	58PH*090−16	33,000	12.0	14.5
3015411	38HDR036−31	CNPV*3621A**	58PH*110−20	33,000	12.0	14.5
1085852	38HDR036−31	CNPV*3621A**+TDR		33,000	11.0	13.0
3112149	38HDR036−31	CNPV*4217A**	58CV(A,X)090−16	33,400	12.0	14.5
3112151	38HDR036−31	CNPV*4217A**	58MEB040−12	33,400	12.0	14.5
3112152	38HDR036−31	CNPV*4217A**	58MEB060−12	33,400	12.0	14.5
3112153	38HDR036−31	CNPV*4217A**	58MEB080−12	33,400	12.0	14.5
3112154	38HDR036−31	CNPV*4217A**	58MEB080−16	33,400	12.0	14.5
3112148	38HDR036−31	CNPV*4217A**	58MV(B,C)060−14	33,400	12.0	14.5
3112150	38HDR036−31	CNPV*4217A**	58PH*070−16	33,400	12.0	14.5
3112147	38HDR036−31	CNPV*4217A**+TDR		33,400	11.0	13.0
1086008	38HDR036−31	CNPV*4221A**	58CV(A,X)090−16	33,400	11.5	14.5
1085868	38HDR036−31	CNPV*4221A**	58CV(A,X)110−20	33,400	11.5	14.5
3112155	38HDR036−31	CNPV*4221A**	58MEB100−20	33,400	12.0	14.5
1390530	38HDR036−31	CNPV*4221A**	58MV(B,C)060−14	33,400	11.5	14.5
1390538	38HDR036−31	CNPV*4221A**	58MV(B,C)080−14	33,400	11.5	14.0
1390556	38HDR036−31	CNPV*4221A**	58MV(B,C)080−20	33,400	11.5	14.0
1390574	38HDR036−31	CNPV*4221A**	58MV(B,C)100−20	33,400	11.5	14.0
3015412	38HDR036−31	CNPV*4221A**	58PH*090−16	33,400	12.0	14.5
3015413	38HDR036−31	CNPV*4221A**	58PH*110−20	33,400	12.0	14.5
1085934	38HDR036−31	CSPH*3612A**	58CV(A,X)070−12	33,000	11.5	14.0
1085936	38HDR036−31	CSPH*3612A**	58CV(A,X)090−16	33,000	11.5	14.5
1085938	38HDR036−31	CSPH*3612A**	58CV(A,X)110−20	33,000	11.5	14.5
1085940	38HDR036−31	CSPH*3612A**	58CV(A,X)135−22	33,000	11.5	14.5
1085942	38HDR036−31	CSPH*3612A**	58CV(A,X)155−22	33,000	11.5	14.5
3112166	38HDR036−31	CSPH*3612A**	58MEB040−12	33,000	12.0	14.5
3112167	38HDR036−31	CSPH*3612A**	58MEB060−12	33,000	12.0	14.5
3112168	38HDR036−31	CSPH*3612A**	58MEB080−12	33,000	12.0	14.5
3112169	38HDR036−31	CSPH*3612A**	58MEB080−16	33,000	12.0	14.5
3112170	38HDR036−31	CSPH*3612A**	58MEB100−20	33,000	12.0	14.5
1390520	38HDR036−31	CSPH*3612A**	58MV(B,C)060−14	33,000	11.5	14.5
1390544	38HDR036−31	CSPH*3612A**	58MV(B,C)080−14	33,000	11.5	14.0
1390562	38HDR036−31	CSPH*3612A**	58MV(B,C)080−20	33,000	11.5	14.0
1390580	38HDR036−31	CSPH*3612A**	58MV(B,C)100−20	33,000	11.5	14.5
1390592	38HDR036−31	CSPH*3612A**	58MV(B,C)120−20	33,000	11.5	14.5
3015422	38HDR036−31	CSPH*3612A**	58PH*045−08	33,000	11.5	14.0
3015423	38HDR036−31	CSPH*3612A**	58PH*070−16	33,000	11.5	14.0
3015424	38HDR036−31	CSPH*3612A**	58PH*090−16	33,000	12.0	14.5
3015425	38HDR036−31	CSPH*3612A**	58PH*110−20	33,000	12.0	14.5
1085920	38HDR036−31	CSPH*3612A**+TDR		33,000	11.0	13.0
1085958	38HDR036−31	CSPH*4212A**	58CV(A,X)070−12	33,400	11.5	14.0
1085960	38HDR036−31	CSPH*4212A**	58CV(A,X)090−16	33,400	11.5	14.5
1085962	38HDR036−31	CSPH*4212A**	58CV(A,X)110−20	33,400	11.5	14.5
1085964	38HDR036−31	CSPH*4212A**	58CV(A,X)135−22	33,400	11.5	14.5
1085966	38HDR036−31	CSPH*4212A**	58CV(A,X)155−22	33,400	11.5	14.5
3112171	38HDR036−31	CSPH*4212A**	58MEB040−12	33,400	12.0	14.5
3112172	38HDR036−31	CSPH*4212A**	58MEB060−12	33,400	12.0	14.5
3112173	38HDR036−31	CSPH*4212A**	58MEB080−12	33,400	12.0	14.5
3112174	38HDR036−31	CSPH*4212A**	58MEB080−16	33,400	12.0	14.5
3112175	38HDR036−31	CSPH*4212A**	58MEB100−20	33,400	12.0	14.5
1390522	38HDR036−31	CSPH*4212A**	58MV(B,C)060−14	33,400	11.5	14.0
1390546	38HDR036−31	CSPH*4212A**	58MV(B,C)080−14	33,400	11.5	14.0
1390564	38HDR036−31	CSPH*4212A**	58MV(B,C)080−20	33,400	11.5	14.0
1390582	38HDR036−31	CSPH*4212A**	58MV(B,C)100−20	33,400	11.5	14.0
1390594	38HDR036−31	CSPH*4212A**	58MV(B,C)120−20	33,400	11.5	14.0
3015426	38HDR036−31	CSPH*4212A**	58PH*045−08	33,400	11.5	14.0
3015427	38HDR036−31	CSPH*4212A**	58PH*070−16	33,400	11.5	14.0
3015428	38HDR036−31	CSPH*4212A**	58PH*090−16	33,400	12.0	14.5
3015429	38HDR036−31	CSPH*4212A**	58PH*110−20	33,400	12.0	14.5
1085944	38HDR036−31	CSPH*4212A**+TDR		33,400	11.0	13.0
1086246	38HDR036−31	FE4AN(B,F)003+UI		33,000	11.5	14.0
1086248	38HDR036−31	FE4AN(B,F)005+UI		33,400	12.5	15.0
1086250	38HDR036−31	FE4ANB006+UI		33,400	12.5	15.0
1086244	38HDR036−31	FE4ANF002+UI		33,000	11.5	13.5
1085976	38HDR036−31	FF1ENP036		33,000	11.0	13.0
1085980	38HDR036−31	FV4BNB006		33,400	12.5	15.0

See notes on page 26

COMBINATION RATINGS (CONT.)

ARI Ref. No.	Model Number	Indoor Model	Furnace Model	Capacity	EER	SEER
1085978	38HDR036−31	FV4BNF002		33,000	11.5	13.5
3404627	38HDR036−31	FV4CNB006		33,400	12.5	15.0
3404626	38HDR036−31	FV4CNF002		33,000	11.5	13.5
1085972	38HDR036−31	FX4CN(B,F)036		33,000	11.5	14.0
1085974	38HDR036−31	FX4CN(B,F)042		33,400	11.5	14.0
1085968	38HDR036−31	FY4ANF036		33,000	11.0	13.0
1085970	38HDR036−31	FY4ANF042		33,400	11.0	13.0
1117042	38HDR036−51	†CNPV*4221A**+TDR		33,400	11.0	13.0
1117982	38HDR036−51	40QAC036−−−3		33,000	11.4	13.0
1117046	38HDR036−51	CAP**3614A**	58CV(A,X)070−12	32,600	11.5	13.5
3015466	38HDR036−51	CAP**3614A**	58PH*045−08	33,000	11.5	14.0
1117044	38HDR036−51	CAP**3614A**+TDR		32,600	11.0	13.0
1117228	38HDR036−51	CAP**3617A**	58CV(A,X)070−12	33,000	11.5	14.0
1117052	38HDR036−51	CAP**3617A**	58CV(A,X)090−16	33,000	11.5	14.0
3116284	38HDR036−51	CAP**3617A**	58MEB040−12	33,000	12.0	14.5
3116285	38HDR036−51	CAP**3617A**	58MEB060−12	33,000	12.0	14.5
3116286	38HDR036−51	CAP**3617A**	58MEB080−12	33,000	12.0	14.5
3116287	38HDR036−51	CAP**3617A**	58MEB080−16	33,000	12.0	14.5
1390596	38HDR036−51	CAP**3617A**	58MV(B,C)060−14	33,000	11.5	13.5
3015467	38HDR036−51	CAP**3617A**	58PH*070−16	33,000	11.5	14.0
1117048	38HDR036−51	CAP**3617A**+TDR		33,000	11.0	13.0
1117232	38HDR036−51	CAP**3621A**	58CV(A,X)090−16	33,000	11.5	14.0
1145786	38HDR036−51	CAP**3621A**	58CV(A,X)110−20	33,000	11.5	14.0
3116288	38HDR036−51	CAP**3621A**	58MEB100−20	33,000	12.0	14.5
1390602	38HDR036−51	CAP**3621A**	58MV(B,C)060−14	33,000	11.5	14.0
1390616	38HDR036−51	CAP**3621A**	58MV(B,C)080−14	33,000	11.5	13.5
1390634	38HDR036−51	CAP**3621A**	58MV(B,C)080−20	33,000	11.5	13.5
1390658	38HDR036−51	CAP**3621A**	58MV(B,C)100−20	33,000	11.5	14.0
3015468	38HDR036−51	CAP**3621A**	58PH*090−16	33,000	12.0	14.5
3015469	38HDR036−51	CAP**3621A**	58PH*110−20	33,000	12.0	14.5
1117054	38HDR036−51	CAP**3621A**+TDR		33,000	11.0	13.0
1117236	38HDR036−51	CAP**4221A**	58CV(A,X)090−16	33,400	11.5	14.0
1145796	38HDR036−51	CAP**4221A**	58CV(A,X)110−20	33,400	11.5	14.0
3116289	38HDR036−51	CAP**4221A**	58MEB100−20	33,400	12.0	14.5
1390604	38HDR036−51	CAP**4221A**	58MV(B,C)060−14	33,400	11.5	14.0
1390624	38HDR036−51	CAP**4221A**	58MV(B,C)080−14	33,400	11.5	13.5
1390642	38HDR036−51	CAP**4221A**	58MV(B,C)080−20	33,400	11.5	14.0
1390660	38HDR036−51	CAP**4221A**	58MV(B,C)100−20	33,400	11.5	14.0
3015470	38HDR036−51	CAP**4221A**	58PH*090−16	33,400	12.0	14.5
3015471	38HDR036−51	CAP**4221A**	58PH*110−20	33,400	12.0	14.5
1145788	38HDR036−51	CAP**4221A**+TDR		33,400	11.0	13.0
1117244	38HDR036−51	CAP**4224A**	58CV(A,X)110−20	33,400	11.5	14.0
1145804	38HDR036−51	CAP**4224A**	58CV(A,X)135−22	33,400	11.5	14.0
1145806	38HDR036−51	CAP**4224A**	58CV(A,X)155−22	33,400	11.5	14.0
1390622	38HDR036−51	CAP**4224A**	58MV(B,C)080−14	33,400	11.5	14.0
1390640	38HDR036−51	CAP**4224A**	58MV(B,C)080−20	33,400	11.5	14.0
1390656	38HDR036−51	CAP**4224A**	58MV(B,C)100−20	33,400	11.5	14.0
1390674	38HDR036−51	CAP**4224A**	58MV(B,C)120−20	33,400	11.5	13.5
1145798	38HDR036−51	CAP**4224A**+TDR		33,400	11.0	13.0
1117156	38HDR036−51	CNPF*3618A**+TDR		33,000	11.0	13.0
1145846	38HDR036−51	CNPH*3617A**	58CV(A,X)070−12	33,000	11.5	13.5
1145848	38HDR036−51	CNPH*3617A**	58CV(A,X)090−16	33,000	11.5	13.5
1145850	38HDR036−51	CNPH*3617A**	58CV(A,X)110−20	33,000	11.5	13.5
1145852	38HDR036−51	CNPH*3617A**	58CV(A,X)135−22	33,000	11.5	13.5
1145854	38HDR036−51	CNPH*3617A**	58CV(A,X)155−22	33,000	11.5	14.0
3116304	38HDR036−51	CNPH*3617A**	58MEB040−12	33,000	12.0	14.5
3116305	38HDR036−51	CNPH*3617A**	58MEB060−12	33,000	12.0	14.5
3116306	38HDR036−51	CNPH*3617A**	58MEB080−12	33,000	12.0	14.5
3116307	38HDR036−51	CNPH*3617A**	58MEB080−16	33,000	12.0	14.5
3116308	38HDR036−51	CNPH*3617A**	58MEB100−20	33,000	12.0	14.5
1390612	38HDR036−51	CNPH*3617A**	58MV(B,C)060−14	33,000	11.5	13.5
1390630	38HDR036−51	CNPH*3617A**	58MV(B,C)080−14	33,000	11.5	13.5
1390648	38HDR036−51	CNPH*3617A**	58MV(B,C)080−20	33,000	11.5	13.5
1390666	38HDR036−51	CNPH*3617A**	58MV(B,C)100−20	33,000	11.5	13.5
1390676	38HDR036−51	CNPH*3617A**	58MV(B,C)120−20	33,000	11.5	13.5
3015477	38HDR036−51	CNPH*3617A**	58PH*045−08	33,000	11.5	14.0
3015478	38HDR036−51	CNPH*3617A**	58PH*070−16	33,000	11.5	14.0
3015479	38HDR036−51	CNPH*3617A**	58PH*090−16	33,000	12.0	14.5
3015480	38HDR036−51	CNPH*3617A**	58PH*110−20	33,000	12.0	14.5
1145832	38HDR036−51	CNPH*3617A**+TDR		33,000	11.0	13.0
1145870	38HDR036−51	CNPH*4221A**	58CV(A,X)070−12	33,400	11.5	14.0
1145872	38HDR036−51	CNPH*4221A**	58CV(A,X)090−16	33,400	11.5	14.5
1145874	38HDR036−51	CNPH*4221A**	58CV(A,X)110−20	33,400	11.5	14.5
1117152	38HDR036−51	CNPH*4221A**	58CV(A,X)135−22	33,400	11.5	14.5
1117154	38HDR036−51	CNPH*4221A**	58CV(A,X)155−22	33,400	11.5	14.5
3116309	38HDR036−51	CNPH*4221A**	58MEB040−12	33,400	12.0	14.5
3116310	38HDR036−51	CNPH*4221A**	58MEB060−12	33,400	12.0	14.5
3116311	38HDR036−51	CNPH*4221A**	58MEB080−12	33,400	12.0	14.5

See notes on page 26

COMBINATION RATINGS (CONT.)

ARI Ref. No.	Model Number	Indoor Model	Furnace Model	Capacity	EER	SEER
3116312	38HDR036−51	CNPH*4221A**	58MEB080−16	33,400	12.0	14.5
3116313	38HDR036−51	CNPH*4221A**	58MEB100−20	33,400	12.0	14.5
1390614	38HDR036−51	CNPH*4221A**	58MV(B,C)060−14	33,400	11.5	14.0
1390632	38HDR036−51	CNPH*4221A**	58MV(B,C)080−14	33,400	11.5	14.0
1390650	38HDR036−51	CNPH*4221A**	58MV(B,C)080−20	33,400	11.5	14.0
1390668	38HDR036−51	CNPH*4221A**	58MV(B,C)100−20	33,400	11.5	14.0
1390678	38HDR036−51	CNPH*4221A**	58MV(B,C)120−20	33,400	11.5	14.5
3015481	38HDR036−51	CNPH*4221A**	58PH*045−08	33,400	11.5	14.0
3015482	38HDR036−51	CNPH*4221A**	58PH*070−16	33,400	11.5	14.0
3015483	38HDR036−51	CNPH*4221A**	58PH*090−16	33,400	12.0	14.5
3015484	38HDR036−51	CNPH*4221A**	58PH*110−20	33,400	12.0	14.5
1145856	38HDR036−51	CNPH*4221A**+TDR		33,400	11.0	13.0
1117246	38HDR036−51	CNPV*3617A**	58CV(A,X)070−12	33,000	11.5	14.0
1145812	38HDR036−51	CNPV*3617A**	58CV(A,X)090−16	33,000	11.5	13.5
3116290	38HDR036−51	CNPV*3617A**	58MEB040−12	33,000	12.0	14.5
3116291	38HDR036−51	CNPV*3617A**	58MEB060−12	33,000	12.0	14.5
3116292	38HDR036−51	CNPV*3617A**	58MEB080−12	33,000	12.0	14.5
3116293	38HDR036−51	CNPV*3617A**	58MEB080−16	33,000	12.0	14.5
1390610	38HDR036−51	CNPV*3617A**	58MV(B,C)060−14	33,000	11.5	13.5
3015472	38HDR036−51	CNPV*3617A**	58PH*070−16	33,000	11.5	14.0
1145808	38HDR036−51	CNPV*3617A**+TDR		33,000	11.0	13.0
1117250	38HDR036−51	CNPV*3621A**	58CV(A,X)090−16	33,000	11.5	14.5
1145822	38HDR036−51	CNPV*3621A**	58CV(A,X)110−20	33,000	11.5	13.5
3116294	38HDR036−51	CNPV*3621A**	58MEB100−20	33,000	12.0	14.5
1390606	38HDR036−51	CNPV*3621A**	58MV(B,C)060−14	33,000	11.5	14.5
1390626	38HDR036−51	CNPV*3621A**	58MV(B,C)080−14	33,000	11.5	13.5
1390644	38HDR036−51	CNPV*3621A**	58MV(B,C)080−20	33,000	11.5	13.5
1390662	38HDR036−51	CNPV*3621A**	58MV(B,C)100−20	33,000	11.5	13.5
3015473	38HDR036−51	CNPV*3621A**	58PH*090−16	33,000	12.0	14.5
3015474	38HDR036−51	CNPV*3621A**	58PH*110−20	33,000	12.0	14.5
1145814	38HDR036−51	CNPV*3621A**+TDR		33,000	11.0	13.0
3116297	38HDR036−51	CNPV*4217A**	58CV(A,X)090−16	33,400	12.0	14.5
3116299	38HDR036−51	CNPV*4217A**	58MEB040−12	33,400	12.0	14.5
3116300	38HDR036−51	CNPV*4217A**	58MEB060−12	33,400	12.0	14.5
3116301	38HDR036−51	CNPV*4217A**	58MEB080−12	33,400	12.0	14.5
3116302	38HDR036−51	CNPV*4217A**	58MEB080−16	33,400	12.0	14.5
3116296	38HDR036−51	CNPV*4217A**	58MV(B,C)060−14	33,400	12.0	14.5
3116298	38HDR036−51	CNPV*4217A**	58PH*070−16	33,400	12.0	14.5
3116295	38HDR036−51	CNPV*4217A**+TDR		33,400	11.0	13.0
1117254	38HDR036−51	CNPV*4221A**	58CV(A,X)090−16	33,400	11.5	14.5
1145830	38HDR036−51	CNPV*4221A**	58CV(A,X)110−20	33,400	11.5	14.5
3116303	38HDR036−51	CNPV*4221A**	58MEB100−20	33,400	12.0	14.5
1390608	38HDR036−51	CNPV*4221A**	58MV(B,C)060−14	33,400	11.5	14.5
1390628	38HDR036−51	CNPV*4221A**	58MV(B,C)080−14	33,400	11.5	14.0
1390646	38HDR036−51	CNPV*4221A**	58MV(B,C)080−20	33,400	11.5	14.0
1390664	38HDR036−51	CNPV*4221A**	58MV(B,C)100−20	33,400	11.5	14.0
3015475	38HDR036−51	CNPV*4221A**	58PH*090−16	33,400	12.0	14.5
3015476	38HDR036−51	CNPV*4221A**	58PH*110−20	33,400	12.0	14.5
1117172	38HDR036−51	CSPH*3612A**	58CV(A,X)070−12	33,000	11.5	14.0
1117174	38HDR036−51	CSPH*3612A**	58CV(A,X)090−16	33,000	11.5	14.5
1117176	38HDR036−51	CSPH*3612A**	58CV(A,X)110−20	33,000	11.5	14.5
1117178	38HDR036−51	CSPH*3612A**	58CV(A,X)135−22	33,000	11.5	14.5
1117180	38HDR036−51	CSPH*3612A**	58CV(A,X)155−22	33,000	11.5	14.5
3116314	38HDR036−51	CSPH*3612A**	58MEB040−12	33,000	12.0	14.5
3116315	38HDR036−51	CSPH*3612A**	58MEB060−12	33,000	12.0	14.5
3116316	38HDR036−51	CSPH*3612A**	58MEB080−12	33,000	12.0	14.5
3116317	38HDR036−51	CSPH*3612A**	58MEB080−16	33,000	12.0	14.5
3116318	38HDR036−51	CSPH*3612A**	58MEB100−20	33,000	12.0	14.5
1390598	38HDR036−51	CSPH*3612A**	58MV(B,C)060−14	33,000	11.5	14.5
1390618	38HDR036−51	CSPH*3612A**	58MV(B,C)080−14	33,000	11.5	14.0
1390636	38HDR036−51	CSPH*3612A**	58MV(B,C)080−20	33,000	11.5	14.0
1390652	38HDR036−51	CSPH*3612A**	58MV(B,C)100−20	33,000	11.5	14.5
1390670	38HDR036−51	CSPH*3612A**	58MV(B,C)120−20	33,000	11.5	14.5
3015485	38HDR036−51	CSPH*3612A**	58PH*045−08	33,000	11.5	14.0
3015486	38HDR036−51	CSPH*3612A**	58PH*070−16	33,000	11.5	14.0
3015487	38HDR036−51	CSPH*3612A**	58PH*090−16	33,000	12.0	14.5
3015488	38HDR036−51	CSPH*3612A**	58PH*110−20	33,000	12.0	14.5
1117158	38HDR036−51	CSPH*3612A**+TDR		33,000	11.0	13.0
1117196	38HDR036−51	CSPH*4212A**	58CV(A,X)070−12	33,400	11.5	14.0
1117198	38HDR036−51	CSPH*4212A**	58CV(A,X)090−16	33,400	11.5	14.5
1117200	38HDR036−51	CSPH*4212A**	58CV(A,X)110−20	33,400	11.5	14.5
1117202	38HDR036−51	CSPH*4212A**	58CV(A,X)135−22	33,400	11.5	14.5
1117204	38HDR036−51	CSPH*4212A**	58CV(A,X)155−22	33,400	11.5	14.5
3116319	38HDR036−51	CSPH*4212A**	58MEB040−12	33,400	12.0	14.5
3116320	38HDR036−51	CSPH*4212A**	58MEB060−12	33,400	12.0	14.5
3116321	38HDR036−51	CSPH*4212A**	58MEB080−12	33,400	12.0	14.5
3116322	38HDR036−51	CSPH*4212A**	58MEB080−16	33,400	12.0	14.5
3116323	38HDR036−51	CSPH*4212A**	58MEB100−20	33,400	12.0	14.5
1390600	38HDR036−51	CSPH*4212A**	58MV(B,C)060−14	33,400	11.5	14.0

See notes on page 26

COMBINATION RATINGS (CONT.)

ARI Ref. No.	Model Number	Indoor Model	Furnace Model	Capacity	EER	SEER
1390620	38HDR036−51	CSPH*4212A**	58MV(B,C)080−14	33,400	11.5	14.0
1390638	38HDR036−51	CSPH*4212A**	58MV(B,C)080−20	33,400	11.5	14.0
1390654	38HDR036−51	CSPH*4212A**	58MV(B,C)100−20	33,400	11.5	14.0
1390672	38HDR036−51	CSPH*4212A**	58MV(B,C)120−20	33,400	11.5	14.0
3015489	38HDR036−51	CSPH*4212A**	58PH*045−08	33,400	11.5	14.0
3015490	38HDR036−51	CSPH*4212A**	58PH*070−16	33,400	11.5	14.0
3015491	38HDR036−51	CSPH*4212A**	58PH*090−16	33,400	12.0	14.5
3015492	38HDR036−51	CSPH*4212A**	58PH*110−20	33,400	12.0	14.5
1117182	38HDR036−51	CSPH*4212A**+TDR		33,400	11.0	13.0
1117216	38HDR036−51	FE4AN(B,F)003+UI		33,000	11.5	14.0
1117218	38HDR036−51	FE4AN(B,F)005+UI		33,400	12.5	15.0
1117220	38HDR036−51	FE4ANB006+UI		33,400	12.5	15.0
1117214	38HDR036−51	FE4ANF002+UI		33,000	11.5	13.5
1117222	38HDR036−51	FF1ENP036		33,000	11.0	13.0
1117226	38HDR036−51	FV4BNB006		33,400	12.5	15.0
1117224	38HDR036−51	FV4BNF002		33,000	11.5	13.5
3404631	38HDR036−51	FV4CNB006		33,400	12.5	15.0
3404630	38HDR036−51	FV4CNF002		33,000	11.5	13.5
1117210	38HDR036−51	FX4CN(B,F)036		33,000	11.5	14.0
1117212	38HDR036−51	FX4CN(B,F)042		33,400	11.5	14.0
1117206	38HDR036−51	FY4ANF036		33,000	11.0	13.0
1117208	38HDR036−51	FY4ANF042		33,400	11.0	13.0
1117484	38HDR036−61	†CNPV*4221A**+TDR		33,400	11.0	13.0
1117984	38HDR036−61	40QAC036−−−3		33,000	11.4	13.0
1117488	38HDR036−61	CAP**3614A**	58CV(A,X)070−12	32,600	11.5	13.5
3015493	38HDR036−61	CAP**3614A**	58PH*045−08	33,000	11.5	14.0
1117486	38HDR036−61	CAP**3614A**+TDR		32,600	11.0	13.0
1117670	38HDR036−61	CAP**3617A**	58CV(A,X)070−12	33,000	11.5	14.0
1117494	38HDR036−61	CAP**3617A**	58CV(A,X)090−16	33,000	11.5	14.0
3116353	38HDR036−61	CAP**3617A**	58MEB040−12	33,000	12.0	14.5
3116354	38HDR036−61	CAP**3617A**	58MEB060−12	33,000	12.0	14.5
3116355	38HDR036−61	CAP**3617A**	58MEB080−12	33,000	12.0	14.5
3116356	38HDR036−61	CAP**3617A**	58MEB080−16	33,000	12.0	14.5
1390680	38HDR036−61	CAP**3617A**	58MV(B,C)060−14	33,000	11.5	13.5
3015494	38HDR036−61	CAP**3617A**	58PH*070−16	33,000	11.5	14.0
1117490	38HDR036−61	CAP**3617A**+TDR		33,000	11.0	13.0
1117674	38HDR036−61	CAP**3621A**	58CV(A,X)090−16	33,000	11.5	14.0
1117504	38HDR036−61	CAP**3621A**	58CV(A,X)110−20	33,000	11.5	14.0
3116357	38HDR036−61	CAP**3621A**	58MEB100−20	33,000	12.0	14.5
1390692	38HDR036−61	CAP**3621A**	58MV(B,C)060−14	33,000	11.5	14.0
1390700	38HDR036−61	CAP**3621A**	58MV(B,C)080−14	33,000	11.5	13.5
1390718	38HDR036−61	CAP**3621A**	58MV(B,C)080−20	33,000	11.5	13.5
1390736	38HDR036−61	CAP**3621A**	58MV(B,C)100−20	33,000	11.5	14.0
3015495	38HDR036−61	CAP**3621A**	58PH*090−16	33,000	12.0	14.5
3015496	38HDR036−61	CAP**3621A**	58PH*110−20	33,000	12.0	14.5
1117496	38HDR036−61	CAP**3621A**+TDR		33,000	11.0	13.0
1117678	38HDR036−61	CAP**4221A**	58CV(A,X)090−16	33,400	11.5	14.0
1117514	38HDR036−61	CAP**4221A**	58CV(A,X)110−20	33,400	11.5	14.0
3116358	38HDR036−61	CAP**4221A**	58MEB100−20	33,400	12.0	14.5
1390694	38HDR036−61	CAP**4221A**	58MV(B,C)060−14	33,400	11.5	14.0
1390702	38HDR036−61	CAP**4221A**	58MV(B,C)080−14	33,400	11.5	13.5
1390720	38HDR036−61	CAP**4221A**	58MV(B,C)080−20	33,400	11.5	14.0
1390738	38HDR036−61	CAP**4221A**	58MV(B,C)100−20	33,400	11.5	14.0
3015497	38HDR036−61	CAP**4221A**	58PH*090−16	33,400	12.0	14.5
3015498	38HDR036−61	CAP**4221A**	58PH*110−20	33,400	12.0	14.5
1117506	38HDR036−61	CAP**4221A**+TDR		33,400	11.0	13.0
1117686	38HDR036−61	CAP**4224A**	58CV(A,X)110−20	33,400	11.5	14.0
1117522	38HDR036−61	CAP**4224A**	58CV(A,X)135−22	33,400	11.5	14.0
1117524	38HDR036−61	CAP**4224A**	58CV(A,X)155−22	33,400	11.5	14.0
1390716	38HDR036−61	CAP**4224A**	58MV(B,C)080−14	33,400	11.5	14.0
1390734	38HDR036−61	CAP**4224A**	58MV(B,C)080−20	33,400	11.5	14.0
1390752	38HDR036−61	CAP**4224A**	58MV(B,C)100−20	33,400	11.5	14.0
1390754	38HDR036−61	CAP**4224A**	58MV(B,C)120−20	33,400	11.5	13.5
1117516	38HDR036−61	CAP**4224A**+TDR		33,400	11.0	13.0
1117598	38HDR036−61	CNPF*3618A**+TDR		33,000	11.0	13.0
1117564	38HDR036−61	CNPH*3617A**	58CV(A,X)070−12	33,000	11.5	13.5
1117566	38HDR036−61	CNPH*3617A**	58CV(A,X)090−16	33,000	11.5	13.5
1117568	38HDR036−61	CNPH*3617A**	58CV(A,X)110−20	33,000	11.5	13.5
1117570	38HDR036−61	CNPH*3617A**	58CV(A,X)135−22	33,000	11.5	13.5
1117572	38HDR036−61	CNPH*3617A**	58CV(A,X)155−22	33,000	11.5	14.0
3116373	38HDR036−61	CNPH*3617A**	58MEB040−12	33,000	12.0	14.5
3116374	38HDR036−61	CNPH*3617A**	58MEB060−12	33,000	12.0	14.5
3116375	38HDR036−61	CNPH*3617A**	58MEB080−12	33,000	12.0	14.5
3116376	38HDR036−61	CNPH*3617A**	58MEB080−16	33,000	12.0	14.5
3116377	38HDR036−61	CNPH*3617A**	58MEB100−20	33,000	12.0	14.5
1390684	38HDR036−61	CNPH*3617A**	58MV(B,C)060−14	33,000	11.5	13.5
1390708	38HDR036−61	CNPH*3617A**	58MV(B,C)080−14	33,000	11.5	13.5
1390726	38HDR036−61	CNPH*3617A**	58MV(B,C)080−20	33,000	11.5	13.5

See notes on page 26

COMBINATION RATINGS (CONT.)

ARI Ref. No.	Model Number	Indoor Model	Furnace Model	Capacity	EER	SEER
1390744	38HDR036−61	CNPH*3617A**	58MV(B,C)100−20	33,000	11.5	13.5
1390756	38HDR036−61	CNPH*3617A**	58MV(B,C)120−20	33,000	11.5	13.5
3015504	38HDR036−61	CNPH*3617A**	58PH*045−08	33,000	11.5	14.0
3015505	38HDR036−61	CNPH*3617A**	58PH*070−16	33,000	11.5	14.0
3015506	38HDR036−61	CNPH*3617A**	58PH*090−16	33,000	12.0	14.5
3015507	38HDR036−61	CNPH*3617A**	58PH*110−20	33,000	12.0	14.5
1117550	38HDR036−61	CNPH*3617A**+TDR		33,000	11.0	13.0
1117588	38HDR036−61	CNPH*4221A**	58CV(A,X)070−12	33,400	11.5	14.0
1117590	38HDR036−61	CNPH*4221A**	58CV(A,X)090−16	33,400	11.5	14.5
1117592	38HDR036−61	CNPH*4221A**	58CV(A,X)110−20	33,400	11.5	14.5
1117594	38HDR036−61	CNPH*4221A**	58CV(A,X)135−22	33,400	11.5	14.5
1117596	38HDR036−61	CNPH*4221A**	58CV(A,X)155−22	33,400	11.5	14.5
3116378	38HDR036−61	CNPH*4221A**	58MEB040−12	33,400	12.0	14.5
3116379	38HDR036−61	CNPH*4221A**	58MEB060−12	33,400	12.0	14.5
3116380	38HDR036−61	CNPH*4221A**	58MEB080−12	33,400	12.0	14.5
3116381	38HDR036−61	CNPH*4221A**	58MEB080−16	33,400	12.0	14.5
3116382	38HDR036−61	CNPH*4221A**	58MEB100−20	33,400	12.0	14.5
1390686	38HDR036−61	CNPH*4221A**	58MV(B,C)060−14	33,400	11.5	14.0
1390710	38HDR036−61	CNPH*4221A**	58MV(B,C)080−14	33,400	11.5	14.0
1390728	38HDR036−61	CNPH*4221A**	58MV(B,C)080−20	33,400	11.5	14.0
1390746	38HDR036−61	CNPH*4221A**	58MV(B,C)100−20	33,400	11.5	14.0
1390758	38HDR036−61	CNPH*4221A**	58MV(B,C)120−20	33,400	11.5	14.5
3015508	38HDR036−61	CNPH*4221A**	58PH*045−08	33,400	11.5	14.0
3015509	38HDR036−61	CNPH*4221A**	58PH*070−16	33,400	11.5	14.0
3015510	38HDR036−61	CNPH*4221A**	58PH*090−16	33,400	12.0	14.5
3015511	38HDR036−61	CNPH*4221A**	58PH*110−20	33,400	12.0	14.5
1117574	38HDR036−61	CNPH*4221A**+TDR		33,400	11.0	13.0
1117688	38HDR036−61	CNPV*3617A**	58CV(A,X)070−12	33,000	11.5	14.0
1117530	38HDR036−61	CNPV*3617A**	58CV(A,X)090−16	33,000	11.5	13.5
3116359	38HDR036−61	CNPV*3617A**	58MEB040−12	33,000	12.0	14.5
3116360	38HDR036−61	CNPV*3617A**	58MEB060−12	33,000	12.0	14.5
3116361	38HDR036−61	CNPV*3617A**	58MEB080−12	33,000	12.0	14.5
3116362	38HDR036−61	CNPV*3617A**	58MEB080−16	33,000	12.0	14.5
1390682	38HDR036−61	CNPV*3617A**	58MV(B,C)060−14	33,000	11.5	13.5
3015499	38HDR036−61	CNPV*3617A**	58PH*070−16	33,000	11.5	14.0
1117526	38HDR036−61	CNPV*3617A**+TDR		33,000	11.0	13.0
1117692	38HDR036−61	CNPV*3621A**	58CV(A,X)090−16	33,000	11.5	14.5
1117540	38HDR036−61	CNPV*3621A**	58CV(A,X)110−20	33,000	11.5	13.5
3116363	38HDR036−61	CNPV*3621A**	58MEB100−20	33,000	12.0	14.5
1390696	38HDR036−61	CNPV*3621A**	58MV(B,C)060−14	33,000	11.5	14.5
1390704	38HDR036−61	CNPV*3621A**	58MV(B,C)080−14	33,000	11.5	13.5
1390722	38HDR036−61	CNPV*3621A**	58MV(B,C)080−20	33,000	11.5	13.5
1390740	38HDR036−61	CNPV*3621A**	58MV(B,C)100−20	33,000	11.5	13.5
3015500	38HDR036−61	CNPV*3621A**	58PH*090−16	33,000	12.0	14.5
3015501	38HDR036−61	CNPV*3621A**	58PH*110−20	33,000	12.0	14.5
1117532	38HDR036−61	CNPV*3621A**+TDR		33,000	11.0	13.0
3116366	38HDR036−61	CNPV*4217A**	58CV(A,X)090−16	33,400	12.0	14.5
3116368	38HDR036−61	CNPV*4217A**	58MEB040−12	33,400	12.0	14.5
3116369	38HDR036−61	CNPV*4217A**	58MEB060−12	33,400	12.0	14.5
3116370	38HDR036−61	CNPV*4217A**	58MEB080−12	33,400	12.0	14.5
3116371	38HDR036−61	CNPV*4217A**	58MEB080−16	33,400	12.0	14.5
3116365	38HDR036−61	CNPV*4217A**	58MV(B,C)060−14	33,400	12.0	14.5
3116367	38HDR036−61	CNPV*4217A**	58PH*070−16	33,400	12.0	14.5
3116364	38HDR036−61	CNPV*4217A**+TDR		33,400	11.0	13.0
1117696	38HDR036−61	CNPV*4221A**	58CV(A,X)090−16	33,400	11.5	14.5
1117548	38HDR036−61	CNPV*4221A**	58CV(A,X)110−20	33,400	11.5	14.5
3116372	38HDR036−61	CNPV*4221A**	58MEB100−20	33,400	12.0	14.5
1390698	38HDR036−61	CNPV*4221A**	58MV(B,C)060−14	33,400	11.5	14.5
1390706	38HDR036−61	CNPV*4221A**	58MV(B,C)080−14	33,400	11.5	14.0
1390724	38HDR036−61	CNPV*4221A**	58MV(B,C)080−20	33,400	11.5	14.0
1390742	38HDR036−61	CNPV*4221A**	58MV(B,C)100−20	33,400	11.5	14.0
3015502	38HDR036−61	CNPV*4221A**	58PH*090−16	33,400	12.0	14.5
3015503	38HDR036−61	CNPV*4221A**	58PH*110−20	33,400	12.0	14.5
1117614	38HDR036−61	CSPH*3612A**	58CV(A,X)070−12	33,000	11.5	14.0
1117616	38HDR036−61	CSPH*3612A**	58CV(A,X)090−16	33,000	11.5	14.5
1117618	38HDR036−61	CSPH*3612A**	58CV(A,X)110−20	33,000	11.5	14.5
1117620	38HDR036−61	CSPH*3612A**	58CV(A,X)135−22	33,000	11.5	14.5
1117622	38HDR036−61	CSPH*3612A**	58CV(A,X)155−22	33,000	11.5	14.5
3116383	38HDR036−61	CSPH*3612A**	58MEB040−12	33,000	12.0	14.5
3116384	38HDR036−61	CSPH*3612A**	58MEB060−12	33,000	12.0	14.5
3116385	38HDR036−61	CSPH*3612A**	58MEB080−12	33,000	12.0	14.5
3116386	38HDR036−61	CSPH*3612A**	58MEB080−16	33,000	12.0	14.5
3116387	38HDR036−61	CSPH*3612A**	58MEB100−20	33,000	12.0	14.5
1390688	38HDR036−61	CSPH*3612A**	58MV(B,C)060−14	33,000	11.5	14.5
1390712	38HDR036−61	CSPH*3612A**	58MV(B,C)080−14	33,000	11.5	14.0
1390730	38HDR036−61	CSPH*3612A**	58MV(B,C)080−20	33,000	11.5	14.0
1390748	38HDR036−61	CSPH*3612A**	58MV(B,C)100−20	33,000	11.5	14.5
1390760	38HDR036−61	CSPH*3612A**	58MV(B,C)120−20	33,000	11.5	14.5
3015512	38HDR036−61	CSPH*3612A**	58PH*045−08	33,000	11.5	14.0

See notes on page 26

COMBINATION RATINGS (CONT.)

ARI Ref. No.	Model Number	Indoor Model	Furnace Model	Capacity	EER	SEER
3015513	38HDR036−61	CSPH*3612A**	58PH*070−16	33,000	11.5	14.0
3015514	38HDR036−61	CSPH*3612A**	58PH*090−16	33,000	12.0	14.5
3015515	38HDR036−61	CSPH*3612A**	58PH*110−20	33,000	12.0	14.5
1117600	38HDR036−61	CSPH*3612A**+TDR		33,000	11.0	13.0
1117638	38HDR036−61	CSPH*4212A**	58CV(A,X)070−12	33,400	11.5	14.0
1117640	38HDR036−61	CSPH*4212A**	58CV(A,X)090−16	33,400	11.5	14.5
1117642	38HDR036−61	CSPH*4212A**	58CV(A,X)110−20	33,400	11.5	14.5
1117644	38HDR036−61	CSPH*4212A**	58CV(A,X)135−22	33,400	11.5	14.5
1117646	38HDR036−61	CSPH*4212A**	58CV(A,X)155−22	33,400	11.5	14.5
3116388	38HDR036−61	CSPH*4212A**	58MEB040−12	33,400	12.0	14.5
3116389	38HDR036−61	CSPH*4212A**	58MEB060−12	33,400	12.0	14.5
3116390	38HDR036−61	CSPH*4212A**	58MEB080−12	33,400	12.0	14.5
3116391	38HDR036−61	CSPH*4212A**	58MEB080−16	33,400	12.0	14.5
3116392	38HDR036−61	CSPH*4212A**	58MEB100−20	33,400	12.0	14.5
1390690	38HDR036−61	CSPH*4212A**	58MV(B,C)060−14	33,400	11.5	14.0
1390714	38HDR036−61	CSPH*4212A**	58MV(B,C)080−14	33,400	11.5	14.0
1390732	38HDR036−61	CSPH*4212A**	58MV(B,C)080−20	33,400	11.5	14.0
1390750	38HDR036−61	CSPH*4212A**	58MV(B,C)100−20	33,400	11.5	14.0
1390762	38HDR036−61	CSPH*4212A**	58MV(B,C)120−20	33,400	11.5	14.0
3015516	38HDR036−61	CSPH*4212A**	58PH*045−08	33,400	11.5	14.0
3015517	38HDR036−61	CSPH*4212A**	58PH*070−16	33,400	11.5	14.0
3015518	38HDR036−61	CSPH*4212A**	58PH*090−16	33,400	12.0	14.5
3015519	38HDR036−61	CSPH*4212A**	58PH*110−20	33,400	12.0	14.5
1117624	38HDR036−61	CSPH*4212A**+TDR		33,400	11.0	13.0
1117658	38HDR036−61	FE4AN(B,F)003+UI		33,000	11.5	14.0
1117660	38HDR036−61	FE4AN(B,F)005+UI		33,400	12.5	15.0
1117662	38HDR036−61	FE4ANB006+UI		33,400	12.5	15.0
1117656	38HDR036−61	FE4ANF002+UI		33,000	11.5	13.5
1117664	38HDR036−61	FF1ENP036		33,000	11.0	13.0
1117668	38HDR036−61	FV4BNB006		33,400	12.5	15.0
1117666	38HDR036−61	FV4BNF002		33,000	11.5	13.5
3404635	38HDR036−61	FV4CNB006		33,400	12.5	15.0
3404634	38HDR036−61	FV4CNF002		33,000	11.5	13.5
1117652	38HDR036−61	FX4CN(B,F)036		33,000	11.5	14.0
1117654	38HDR036−61	FX4CN(B,F)042		33,400	11.5	14.0
1117648	38HDR036−61	FY4ANF036		33,000	11.0	13.0
1117650	38HDR036−61	FY4ANF042		33,400	11.0	13.0
3465144	38HDR048−32	†CNPV*4821A**+TDR		47,000	11.0	13.0
3465807	38HDR048−32	40QAC048−3		45,500	11.5	13.0
3465146	38HDR048−32	CAP**4817A**	58CV(A,X)090−16	46,500	11.5	13.5
3465148	38HDR048−32	CAP**4817A**	58MEB080−16	46,500	11.5	14.0
3465147	38HDR048−32	CAP**4817A**	58PH*070−16	46,500	11.5	13.5
3465145	38HDR048−32	CAP**4817A**+TDR		46,500	11.0	13.0
3465152	38HDR048−32	CAP**4821A**	58CV(A,X)110−20	46,500	11.5	13.5
3465155	38HDR048−32	CAP**4821A**	58MEB100−20	46,500	11.5	14.0
3465150	38HDR048−32	CAP**4821A**	58MV(B,C)080−20	46,000	11.5	13.5
3465151	38HDR048−32	CAP**4821A**	58MV(B,C)100−20	46,500	11.5	13.5
3465153	38HDR048−32	CAP**4821A**	58PH*090−16	46,500	11.5	14.0
3465154	38HDR048−32	CAP**4821A**	58PH*110−20	46,500	11.5	14.0
3465149	38HDR048−32	CAP**4821A**+TDR		47,000	11.0	13.0
3465158	38HDR048−32	CAP**4824A**	58CV(A,X)135−22	46,500	11.5	13.5
3465159	38HDR048−32	CAP**4824A**	58CV(A,X)155−22	46,500	11.5	13.5
3465161	38HDR048−32	CAP**4824A**	58MEB120−20	46,500	11.5	14.0
3465157	38HDR048−32	CAP**4824A**	58MV(B,C)120−20	46,500	11.5	13.5
3465160	38HDR048−32	CAP**4824A**	58PH*135−20	46,500	11.5	14.0
3465156	38HDR048−32	CAP**4824A**+TDR		47,000	11.0	13.0
3465165	38HDR048−32	CAP**6021A**	58CV(A,X)110−20	47,000	11.5	13.5
3465168	38HDR048−32	CAP**6021A**	58MEB100−20	47,000	12.0	14.5
3465163	38HDR048−32	CAP**6021A**	58MV(B,C)080−20	47,000	11.5	13.5
3465164	38HDR048−32	CAP**6021A**	58MV(B,C)100−20	47,000	11.5	13.5
3465166	38HDR048−32	CAP**6021A**	58PH*090−16	47,000	12.0	14.5
3465167	38HDR048−32	CAP**6021A**	58PH*110−20	47,000	12.0	14.5
3465162	38HDR048−32	CAP**6021A**+TDR		47,500	11.0	13.0
3465171	38HDR048−32	CAP**6024A**	58CV(A,X)135−22	47,000	11.5	13.5
3465172	38HDR048−32	CAP**6024A**	58CV(A,X)155−22	47,000	11.5	14.0
3465174	38HDR048−32	CAP**6024A**	58MEB120−20	47,000	12.0	14.5
3465170	38HDR048−32	CAP**6024A**	58MV(B,C)120−20	47,000	11.5	13.5
3465173	38HDR048−32	CAP**6024A**	58PH*135−20	47,000	12.0	14.5
3465169	38HDR048−32	CAP**6024A**+TDR		47,500	11.0	13.0
3465221	38HDR048−32	CNPF*4818A**+TDR		46,000	11.0	13.0
3465197	38HDR048−32	CNPH*4821A**	58CV(A,X)090−16	46,500	11.5	13.5
3465198	38HDR048−32	CNPH*4821A**	58CV(A,X)110−20	46,500	11.5	13.5
3465199	38HDR048−32	CNPH*4821A**	58CV(A,X)135−22	46,500	11.5	13.5
3465200	38HDR048−32	CNPH*4821A**	58CV(A,X)155−22	46,500	11.5	13.5
3465204	38HDR048−32	CNPH*4821A**	58MEB080−16	46,500	11.5	14.0
3465205	38HDR048−32	CNPH*4821A**	58MEB100−20	46,500	11.5	14.0
3465206	38HDR048−32	CNPH*4821A**	58MEB120−20	46,500	11.5	14.0
3465194	38HDR048−32	CNPH*4821A**	58MV(B,C)080−20	46,500	11.5	13.5

See notes on page 26

COMBINATION RATINGS (CONT.)

ARI Ref. No.	Model Number	Indoor Model	Furnace Model	Capacity	EER	SEER
3465195	38HDR048−32	CNPH*4821A**	58MV(B,C)100−20	46,500	11.5	13.5
3465196	38HDR048−32	CNPH*4821A**	58MV(B,C)120−20	46,500	11.5	13.5
3465201	38HDR048−32	CNPH*4821A**	58PH*090−16	46,500	11.5	13.5
3465202	38HDR048−32	CNPH*4821A**	58PH*110−20	46,500	11.5	13.5
3465203	38HDR048−32	CNPH*4821A**	58PH*135−20	46,500	11.5	13.5
3465193	38HDR048−32	CNPH*4821A**+TDR		47,000	11.0	13.0
3465211	38HDR048−32	CNPH*6024A**	58CV(A,X)090−16	47,000	11.5	13.5
3465212	38HDR048−32	CNPH*6024A**	58CV(A,X)110−20	47,000	11.5	13.5
3465213	38HDR048−32	CNPH*6024A**	58CV(A,X)135−22	47,000	11.5	13.5
3465214	38HDR048−32	CNPH*6024A**	58CV(A,X)155−22	47,000	11.5	14.0
3465218	38HDR048−32	CNPH*6024A**	58MEB080−16	47,000	11.5	14.0
3465219	38HDR048−32	CNPH*6024A**	58MEB100−20	47,000	12.0	14.5
3465220	38HDR048−32	CNPH*6024A**	58MEB120−20	47,000	12.0	14.5
3465208	38HDR048−32	CNPH*6024A**	58MV(B,C)080−20	47,000	11.5	13.5
3465209	38HDR048−32	CNPH*6024A**	58MV(B,C)100−20	47,000	11.5	13.5
3465210	38HDR048−32	CNPH*6024A**	58MV(B,C)120−20	47,000	11.5	13.5
3465215	38HDR048−32	CNPH*6024A**	58PH*090−16	47,000	12.0	14.5
3465216	38HDR048−32	CNPH*6024A**	58PH*110−20	47,000	12.0	14.5
3465217	38HDR048−32	CNPH*6024A**	58PH*135−20	47,000	12.0	14.5
3465207	38HDR048−32	CNPH*6024A**+TDR		47,500	11.0	13.0
3465177	38HDR048−32	CNPV*4821A**	58CV(A,X)110−20	46,500	11.5	13.5
3465180	38HDR048−32	CNPV*4821A**	58MEB100−20	46,500	11.5	13.5
3465175	38HDR048−32	CNPV*4821A**	58MV(B,C)080−20	46,500	11.5	13.5
3465176	38HDR048−32	CNPV*4821A**	58MV(B,C)100−20	46,500	11.5	13.5
3465178	38HDR048−32	CNPV*4821A**	58PH*090−16	46,500	11.5	14.0
3465179	38HDR048−32	CNPV*4821A**	58PH*110−20	46,500	11.5	14.0
3465183	38HDR048−32	CNPV*4824A**	58CV(A,X)135−22	46,500	11.5	13.5
3465184	38HDR048−32	CNPV*4824A**	58CV(A,X)155−22	46,500	11.5	13.5
3465186	38HDR048−32	CNPV*4824A**	58MEB120−20	46,500	11.5	14.0
3465182	38HDR048−32	CNPV*4824A**	58MV(B,C)120−20	46,500	11.5	13.5
3465185	38HDR048−32	CNPV*4824A**	58PH*135−20	46,500	11.5	14.0
3465181	38HDR048−32	CNPV*4824A**+TDR		47,000	11.0	13.0
3465189	38HDR048−32	CNPV*6024A**	58CV(A,X)135−22	47,000	11.5	13.5
3465190	38HDR048−32	CNPV*6024A**	58CV(A,X)155−22	47,000	11.5	14.0
3465192	38HDR048−32	CNPV*6024A**	58MEB120−20	47,000	12.0	14.5
3465188	38HDR048−32	CNPV*6024A**	58MV(B,C)120−20	47,000	11.5	13.5
3465191	38HDR048−32	CNPV*6024A**	58PH*135−20	47,000	12.0	14.5
3465187	38HDR048−32	CNPV*6024A**+TDR		47,500	11.0	13.0
3465226	38HDR048−32	CSPH*4812A**	58CV(A,X)090−16	46,500	11.5	13.5
3465227	38HDR048−32	CSPH*4812A**	58CV(A,X)110−20	46,500	11.5	13.5
3465228	38HDR048−32	CSPH*4812A**	58CV(A,X)135−22	46,500	11.5	13.5
3465229	38HDR048−32	CSPH*4812A**	58CV(A,X)155−22	46,500	11.5	13.5
3465233	38HDR048−32	CSPH*4812A**	58MEB080−16	46,500	11.5	14.0
3465234	38HDR048−32	CSPH*4812A**	58MEB100−20	46,500	11.5	14.0
3465235	38HDR048−32	CSPH*4812A**	58MEB120−20	46,500	11.5	14.0
3465223	38HDR048−32	CSPH*4812A**	58MV(B,C)080−20	46,500	11.5	13.5
3465224	38HDR048−32	CSPH*4812A**	58MV(B,C)100−20	46,500	11.5	13.5
3465225	38HDR048−32	CSPH*4812A**	58MV(B,C)120−20	46,500	11.5	13.5
3465230	38HDR048−32	CSPH*4812A**	58PH*090−16	46,500	11.5	14.0
3465231	38HDR048−32	CSPH*4812A**	58PH*110−20	46,500	11.5	14.0
3465232	38HDR048−32	CSPH*4812A**	58PH*135−20	46,500	11.5	14.0
3465222	38HDR048−32	CSPH*4812A**+TDR		47,000	11.0	13.0
3465240	38HDR048−32	CSPH*6012A**	58CV(A,X)090−16	47,000	11.5	13.5
3465241	38HDR048−32	CSPH*6012A**	58CV(A,X)110−20	47,000	11.5	14.0
3465242	38HDR048−32	CSPH*6012A**	58CV(A,X)135−22	47,000	11.5	14.0
3465243	38HDR048−32	CSPH*6012A**	58CV(A,X)155−22	47,000	11.5	14.0
3465247	38HDR048−32	CSPH*6012A**	58MEB080−16	47,000	12.0	14.5
3465248	38HDR048−32	CSPH*6012A**	58MEB100−20	47,000	12.0	14.5
3465249	38HDR048−32	CSPH*6012A**	58MEB120−20	47,000	12.0	14.5
3465237	38HDR048−32	CSPH*6012A**	58MV(B,C)080−20	47,000	11.5	13.5
3465238	38HDR048−32	CSPH*6012A**	58MV(B,C)100−20	47,000	11.5	13.5
3465239	38HDR048−32	CSPH*6012A**	58MV(B,C)120−20	47,000	11.5	13.5
3465244	38HDR048−32	CSPH*6012A**	58PH*090−16	47,000	12.0	14.5
3465245	38HDR048−32	CSPH*6012A**	58PH*110−20	47,000	12.0	14.5
3465246	38HDR048−32	CSPH*6012A**	58PH*135−20	47,000	12.0	14.5
3465236	38HDR048−32	CSPH*6012A**+TDR		47,500	11.0	13.0
3465254	38HDR048−32	FE4AN(B,F)005+UI		47,000	11.5	13.5
3465255	38HDR048−32	FE4ANB006+UI		47,500	11.5	14.0
3465256	38HDR048−32	FV4BN(B,F)005		47,000	11.5	14.0
3465257	38HDR048−32	FV4BNB006		47,500	11.5	14.0
3465252	38HDR048−32	FX4CN(B,F)048		47,000	11.5	13.5
3465253	38HDR048−32	FX4CN(B,F)060		47,500	11.5	14.0
3465251	38HDR048−32	FY4ANB060		47,500	11.0	13.0
3465250	38HDR048−32	FY4ANF048		47,000	11.0	13.0
3465258	38HDR048−52	†CNPV*4821A**+TDR		47,000	11.0	13.0
3465808	38HDR048−52	40QAC048−3		45,500	11.5	13.0
3465260	38HDR048−52	CAP**4817A**	58CV(A,X)090−16	46,500	11.5	13.5
3465262	38HDR048−52	CAP**4817A**	58MEB080−16	46,500	11.5	14.0

See notes on page 26

COMBINATION RATINGS (CONT.)

ARI Ref. No.	Model Number	Indoor Model	Furnace Model	Capacity	EER	SEER
3465261	38HDR048−52	CAP**4817A**	58PH*070−16	46,500	11.5	13.5
3465259	38HDR048−52	CAP**4817A**+TDR		46,500	11.0	13.0
3465266	38HDR048−52	CAP**4821A**	58CV(A,X)110−20	46,500	11.5	13.5
3465269	38HDR048−52	CAP**4821A**	58MEB100−20	46,500	11.5	14.0
3465264	38HDR048−52	CAP**4821A**	58MV(B,C)080−20	46,000	11.5	13.5
3465265	38HDR048−52	CAP**4821A**	58MV(B,C)100−20	46,500	11.5	13.5
3465267	38HDR048−52	CAP**4821A**	58PH*090−16	46,500	11.5	14.0
3465268	38HDR048−52	CAP**4821A**	58PH*110−20	46,500	11.5	14.0
3465263	38HDR048−52	CAP**4821A**+TDR		47,000	11.0	13.0
3465272	38HDR048−52	CAP**4824A**	58CV(A,X)135−22	46,500	11.5	13.5
3465273	38HDR048−52	CAP**4824A**	58CV(A,X)155−22	46,500	11.5	13.5
3465275	38HDR048−52	CAP**4824A**	58MEB120−20	46,500	11.5	14.0
3465271	38HDR048−52	CAP**4824A**	58MV(B,C)120−20	46,500	11.5	13.5
3465274	38HDR048−52	CAP**4824A**	58PH*135−20	46,500	11.5	14.0
3465270	38HDR048−52	CAP**4824A**+TDR		47,000	11.0	13.0
3465279	38HDR048−52	CAP**6021A**	58CV(A,X)110−20	47,000	11.5	13.5
3465282	38HDR048−52	CAP**6021A**	58MEB100−20	47,000	12.0	14.5
3465277	38HDR048−52	CAP**6021A**	58MV(B,C)080−20	47,000	11.5	13.5
3465278	38HDR048−52	CAP**6021A**	58MV(B,C)100−20	47,000	11.5	13.5
3465280	38HDR048−52	CAP**6021A**	58PH*090−16	47,000	12.0	14.5
3465281	38HDR048−52	CAP**6021A**	58PH*110−20	47,000	12.0	14.5
3465276	38HDR048−52	CAP**6021A**+TDR		47,500	11.0	13.0
3465285	38HDR048−52	CAP**6024A**	58CV(A,X)135−22	47,000	11.5	13.5
3465286	38HDR048−52	CAP**6024A**	58CV(A,X)155−22	47,000	11.5	14.0
3465288	38HDR048−52	CAP**6024A**	58MEB120−20	47,000	12.0	14.5
3465284	38HDR048−52	CAP**6024A**	58MV(B,C)120−20	47,000	11.5	13.5
3465287	38HDR048−52	CAP**6024A**	58PH*135−20	47,000	12.0	14.5
3465283	38HDR048−52	CAP**6024A**+TDR		47,500	11.0	13.0
3465335	38HDR048−52	CNPF*4818A**+TDR		46,000	11.0	13.0
3465311	38HDR048−52	CNPH*4821A**	58CV(A,X)090−16	46,500	11.5	13.5
3465312	38HDR048−52	CNPH*4821A**	58CV(A,X)110−20	46,500	11.5	13.5
3465313	38HDR048−52	CNPH*4821A**	58CV(A,X)135−22	46,500	11.5	13.5
3465314	38HDR048−52	CNPH*4821A**	58CV(A,X)155−22	46,500	11.5	13.5
3465318	38HDR048−52	CNPH*4821A**	58MEB080−16	46,500	11.5	14.0
3465319	38HDR048−52	CNPH*4821A**	58MEB100−20	46,500	11.5	14.0
3465320	38HDR048−52	CNPH*4821A**	58MEB120−20	46,500	11.5	14.0
3465308	38HDR048−52	CNPH*4821A**	58MV(B,C)080−20	46,500	11.5	13.5
3465309	38HDR048−52	CNPH*4821A**	58MV(B,C)100−20	46,500	11.5	13.5
3465310	38HDR048−52	CNPH*4821A**	58MV(B,C)120−20	46,500	11.5	13.5
3465315	38HDR048−52	CNPH*4821A**	58PH*090−16	46,500	11.5	13.5
3465316	38HDR048−52	CNPH*4821A**	58PH*110−20	46,500	11.5	13.5
3465317	38HDR048−52	CNPH*4821A**	58PH*135−20	46,500	11.5	13.5
3465307	38HDR048−52	CNPH*4821A**+TDR		47,000	11.0	13.0
3465325	38HDR048−52	CNPH*6024A**	58CV(A,X)090−16	47,000	11.5	13.5
3465326	38HDR048−52	CNPH*6024A**	58CV(A,X)110−20	47,000	11.5	13.5
3465327	38HDR048−52	CNPH*6024A**	58CV(A,X)135−22	47,000	11.5	13.5
3465328	38HDR048−52	CNPH*6024A**	58CV(A,X)155−22	47,000	11.5	14.0
3465332	38HDR048−52	CNPH*6024A**	58MEB080−16	47,000	11.5	14.0
3465333	38HDR048−52	CNPH*6024A**	58MEB100−20	47,000	12.0	14.5
3465334	38HDR048−52	CNPH*6024A**	58MEB120−20	47,000	12.0	14.5
3465322	38HDR048−52	CNPH*6024A**	58MV(B,C)080−20	47,000	11.5	13.5
3465323	38HDR048−52	CNPH*6024A**	58MV(B,C)100−20	47,000	11.5	13.5
3465324	38HDR048−52	CNPH*6024A**	58MV(B,C)120−20	47,000	11.5	13.5
3465329	38HDR048−52	CNPH*6024A**	58PH*090−16	47,000	12.0	14.5
3465330	38HDR048−52	CNPH*6024A**	58PH*110−20	47,000	12.0	14.5
3465331	38HDR048−52	CNPH*6024A**	58PH*135−20	47,000	12.0	14.5
3465321	38HDR048−52	CNPH*6024A**+TDR		47,500	11.0	13.0
3465291	38HDR048−52	CNPV*4821A**	58CV(A,X)110−20	46,500	11.5	13.5
3465294	38HDR048−52	CNPV*4821A**	58MEB100−20	46,500	11.5	13.5
3465289	38HDR048−52	CNPV*4821A**	58MV(B,C)080−20	46,500	11.5	13.5
3465290	38HDR048−52	CNPV*4821A**	58MV(B,C)100−20	46,500	11.5	13.5
3465292	38HDR048−52	CNPV*4821A**	58PH*090−16	46,500	11.5	14.0
3465293	38HDR048−52	CNPV*4821A**	58PH*110−20	46,500	11.5	14.0
3465297	38HDR048−52	CNPV*4824A**	58CV(A,X)135−22	46,500	11.5	13.5
3465298	38HDR048−52	CNPV*4824A**	58CV(A,X)155−22	46,500	11.5	13.5
3465300	38HDR048−52	CNPV*4824A**	58MEB120−20	46,500	11.5	14.0
3465296	38HDR048−52	CNPV*4824A**	58MV(B,C)120−20	46,500	11.5	13.5
3465299	38HDR048−52	CNPV*4824A**	58PH*135−20	46,500	11.5	14.0
3465295	38HDR048−52	CNPV*4824A**+TDR		47,000	11.0	13.0
3465303	38HDR048−52	CNPV*6024A**	58CV(A,X)135−22	47,000	11.5	13.5
3465304	38HDR048−52	CNPV*6024A**	58CV(A,X)155−22	47,000	11.5	14.0
3465306	38HDR048−52	CNPV*6024A**	58MEB120−20	47,000	12.0	14.5
3465302	38HDR048−52	CNPV*6024A**	58MV(B,C)120−20	47,000	11.5	13.5
3465305	38HDR048−52	CNPV*6024A**	58PH*135−20	47,000	12.0	14.5
3465301	38HDR048−52	CNPV*6024A**+TDR		47,500	11.0	13.0
3465340	38HDR048−52	CSPH*4812A**	58CV(A,X)090−16	46,500	11.5	13.5
3465341	38HDR048−52	CSPH*4812A**	58CV(A,X)110−20	46,500	11.5	13.5
3465342	38HDR048−52	CSPH*4812A**	58CV(A,X)135−22	46,500	11.5	13.5
3465343	38HDR048−52	CSPH*4812A**	58CV(A,X)155−22	46,500	11.5	13.5

See notes on page 26

COMBINATION RATINGS (CONT.)

ARI Ref. No.	Model Number	Indoor Model	Furnace Model	Capacity	EER	SEER
3465347	38HDR048−52	CSPH*4812A**	58MEB080−16	46,500	11.5	14.0
3465348	38HDR048−52	CSPH*4812A**	58MEB100−20	46,500	11.5	14.0
3465349	38HDR048−52	CSPH*4812A**	58MEB120−20	46,500	11.5	14.0
3465337	38HDR048−52	CSPH*4812A**	58MV(B,C)080−20	46,500	11.5	13.5
3465338	38HDR048−52	CSPH*4812A**	58MV(B,C)100−20	46,500	11.5	13.5
3465339	38HDR048−52	CSPH*4812A**	58MV(B,C)120−20	46,500	11.5	13.5
3465344	38HDR048−52	CSPH*4812A**	58PH*090−16	46,500	11.5	14.0
3465345	38HDR048−52	CSPH*4812A**	58PH*110−20	46,500	11.5	14.0
3465346	38HDR048−52	CSPH*4812A**	58PH*135−20	46,500	11.5	14.0
3465336	38HDR048−52	CSPH*4812A**+TDR		47,000	11.0	13.0
3465354	38HDR048−52	CSPH*6012A**	58CV(A,X)090−16	47,000	11.5	13.5
3465355	38HDR048−52	CSPH*6012A**	58CV(A,X)110−20	47,000	11.5	14.0
3465356	38HDR048−52	CSPH*6012A**	58CV(A,X)135−22	47,000	11.5	14.0
3465357	38HDR048−52	CSPH*6012A**	58CV(A,X)155−22	47,000	11.5	14.0
3465361	38HDR048−52	CSPH*6012A**	58MEB080−16	47,000	12.0	14.5
3465362	38HDR048−52	CSPH*6012A**	58MEB100−20	47,000	12.0	14.5
3465363	38HDR048−52	CSPH*6012A**	58MEB120−20	47,000	12.0	14.5
3465351	38HDR048−52	CSPH*6012A**	58MV(B,C)080−20	47,000	11.5	13.5
3465352	38HDR048−52	CSPH*6012A**	58MV(B,C)100−20	47,000	11.5	13.5
3465353	38HDR048−52	CSPH*6012A**	58MV(B,C)120−20	47,000	11.5	13.5
3465358	38HDR048−52	CSPH*6012A**	58PH*090−16	47,000	12.0	14.5
3465359	38HDR048−52	CSPH*6012A**	58PH*110−20	47,000	12.0	14.5
3465360	38HDR048−52	CSPH*6012A**	58PH*135−20	47,000	12.0	14.5
3465350	38HDR048−52	CSPH*6012A**+TDR		47,500	11.0	13.0
3465368	38HDR048−52	FE4AN(B,F)005+UI		47,000	11.5	13.5
3465369	38HDR048−52	FE4ANB006+UI		47,500	11.5	14.0
3465370	38HDR048−52	FV4BN(B,F)005		47,000	11.5	14.0
3465371	38HDR048−52	FV4BNB006		47,500	11.5	14.0
3465366	38HDR048−52	FX4CN(B,F)048		47,000	11.5	13.5
3465367	38HDR048−52	FX4CN(B,F)060		47,500	11.5	14.0
3465365	38HDR048−52	FY4ANB060		47,500	11.0	13.0
3465364	38HDR048−52	FY4ANF048		47,000	11.0	13.0
3465372	38HDR048−62	†CNPV*4821A**+TDR		47,000	11.0	13.0
3465809	38HDR048−62	40QAC048−3		45,500	11.5	13.0
3465374	38HDR048−62	CAP**4817A**	58CV(A,X)090−16	46,500	11.5	13.5
3465376	38HDR048−62	CAP**4817A**	58MEB080−16	46,500	11.5	14.0
3465375	38HDR048−62	CAP**4817A**	58PH*070−16	46,500	11.5	13.5
3465373	38HDR048−62	CAP**4817A**+TDR		46,500	11.0	13.0
3465380	38HDR048−62	CAP**4821A**	58CV(A,X)110−20	46,500	11.5	13.5
3465383	38HDR048−62	CAP**4821A**	58MEB100−20	46,500	11.5	14.0
3465378	38HDR048−62	CAP**4821A**	58MV(B,C)080−20	46,000	11.5	13.5
3465379	38HDR048−62	CAP**4821A**	58MV(B,C)100−20	46,500	11.5	13.5
3465381	38HDR048−62	CAP**4821A**	58PH*090−16	46,500	11.5	14.0
3465382	38HDR048−62	CAP**4821A**	58PH*110−20	46,500	11.5	14.0
3465377	38HDR048−62	CAP**4821A**+TDR		47,000	11.0	13.0
3465386	38HDR048−62	CAP**4824A**	58CV(A,X)135−22	46,500	11.5	13.5
3465387	38HDR048−62	CAP**4824A**	58CV(A,X)155−22	46,500	11.5	13.5
3465389	38HDR048−62	CAP**4824A**	58MEB120−20	46,500	11.5	14.0
3465385	38HDR048−62	CAP**4824A**	58MV(B,C)120−20	46,500	11.5	13.5
3465388	38HDR048−62	CAP**4824A**	58PH*135−20	46,500	11.5	14.0
3465384	38HDR048−62	CAP**4824A**+TDR		47,000	11.0	13.0
3465393	38HDR048−62	CAP**6021A**	58CV(A,X)110−20	47,000	11.5	13.5
3465396	38HDR048−62	CAP**6021A**	58MEB100−20	47,000	12.0	14.5
3465391	38HDR048−62	CAP**6021A**	58MV(B,C)080−20	47,000	11.5	13.5
3465392	38HDR048−62	CAP**6021A**	58MV(B,C)100−20	47,000	11.5	13.5
3465394	38HDR048−62	CAP**6021A**	58PH*090−16	47,000	12.0	14.5
3465395	38HDR048−62	CAP**6021A**	58PH*110−20	47,000	12.0	14.5
3465390	38HDR048−62	CAP**6021A**+TDR		47,500	11.0	13.0
3465399	38HDR048−62	CAP**6024A**	58CV(A,X)135−22	47,000	11.5	13.5
3465400	38HDR048−62	CAP**6024A**	58CV(A,X)155−22	47,000	11.5	14.0
3465402	38HDR048−62	CAP**6024A**	58MEB120−20	47,000	12.0	14.5
3465398	38HDR048−62	CAP**6024A**	58MV(B,C)120−20	47,000	11.5	13.5
3465401	38HDR048−62	CAP**6024A**	58PH*135−20	47,000	12.0	14.5
3465397	38HDR048−62	CAP**6024A**+TDR		47,500	11.0	13.0
3465449	38HDR048−62	CNPF*4818A**+TDR		46,000	11.0	13.0
3465425	38HDR048−62	CNPH*4821A**	58CV(A,X)090−16	46,500	11.5	13.5
3465426	38HDR048−62	CNPH*4821A**	58CV(A,X)110−20	46,500	11.5	13.5
3465427	38HDR048−62	CNPH*4821A**	58CV(A,X)135−22	46,500	11.5	13.5
3465428	38HDR048−62	CNPH*4821A**	58CV(A,X)155−22	46,500	11.5	13.5
3465432	38HDR048−62	CNPH*4821A**	58MEB080−16	46,500	11.5	14.0
3465433	38HDR048−62	CNPH*4821A**	58MEB100−20	46,500	11.5	14.0
3465434	38HDR048−62	CNPH*4821A**	58MEB120−20	46,500	11.5	14.0
3465422	38HDR048−62	CNPH*4821A**	58MV(B,C)080−20	46,500	11.5	13.5
3465423	38HDR048−62	CNPH*4821A**	58MV(B,C)100−20	46,500	11.5	13.5
3465424	38HDR048−62	CNPH*4821A**	58MV(B,C)120−20	46,500	11.5	13.5
3465429	38HDR048−62	CNPH*4821A**	58PH*090−16	46,500	11.5	13.5
3465430	38HDR048−62	CNPH*4821A**	58PH*110−20	46,500	11.5	13.5
3465431	38HDR048−62	CNPH*4821A**	58PH*135−20	46,500	11.5	13.5

See notes on page 26

COMBINATION RATINGS (CONT.)

ARI Ref. No.	Model Number	Indoor Model	Furnace Model	Capacity	EER	SEER
3465421	38HDR048−62	CNPH*4821A**+TDR		47,000	11.0	13.0
3465439	38HDR048−62	CNPH*6024A**	58CV(A,X)090−16	47,000	11.5	13.5
3465440	38HDR048−62	CNPH*6024A**	58CV(A,X)110−20	47,000	11.5	13.5
3465441	38HDR048−62	CNPH*6024A**	58CV(A,X)135−22	47,000	11.5	13.5
3465442	38HDR048−62	CNPH*6024A**	58CV(A,X)155−22	47,000	11.5	14.0
3465446	38HDR048−62	CNPH*6024A**	58MEB080−16	47,000	11.5	14.0
3465447	38HDR048−62	CNPH*6024A**	58MEB100−20	47,000	12.0	14.5
3465448	38HDR048−62	CNPH*6024A**	58MEB120−20	47,000	12.0	14.5
3465436	38HDR048−62	CNPH*6024A**	58MV(B,C)080−20	47,000	11.5	13.5
3465437	38HDR048−62	CNPH*6024A**	58MV(B,C)100−20	47,000	11.5	13.5
3465438	38HDR048−62	CNPH*6024A**	58MV(B,C)120−20	47,000	11.5	13.5
3465443	38HDR048−62	CNPH*6024A**	58PH*090−16	47,000	12.0	14.5
3465444	38HDR048−62	CNPH*6024A**	58PH*110−20	47,000	12.0	14.5
3465445	38HDR048−62	CNPH*6024A**	58PH*135−20	47,000	12.0	14.5
3465435	38HDR048−62	CNPH*6024A**+TDR		47,500	11.0	13.0
3465405	38HDR048−62	CNPV*4821A**	58CV(A,X)110−20	46,500	11.5	13.5
3465408	38HDR048−62	CNPV*4821A**	58MEB100−20	46,500	11.5	13.5
3465403	38HDR048−62	CNPV*4821A**	58MV(B,C)080−20	46,500	11.5	13.5
3465404	38HDR048−62	CNPV*4821A**	58MV(B,C)100−20	46,500	11.5	13.5
3465406	38HDR048−62	CNPV*4821A**	58PH*090−16	46,500	11.5	14.0
3465407	38HDR048−62	CNPV*4821A**	58PH*110−20	46,500	11.5	14.0
3465411	38HDR048−62	CNPV*4824A**	58CV(A,X)135−22	46,500	11.5	13.5
3465412	38HDR048−62	CNPV*4824A**	58CV(A,X)155−22	46,500	11.5	13.5
3465414	38HDR048−62	CNPV*4824A**	58MEB120−20	46,500	11.5	14.0
3465410	38HDR048−62	CNPV*4824A**	58MV(B,C)120−20	46,500	11.5	13.5
3465413	38HDR048−62	CNPV*4824A**	58PH*135−20	46,500	11.5	14.0
3465409	38HDR048−62	CNPV*4824A**+TDR		47,000	11.0	13.0
3465417	38HDR048−62	CNPV*6024A**	58CV(A,X)135−22	47,000	11.5	13.5
3465418	38HDR048−62	CNPV*6024A**	58CV(A,X)155−22	47,000	11.5	14.0
3465420	38HDR048−62	CNPV*6024A**	58MEB120−20	47,000	12.0	14.5
3465416	38HDR048−62	CNPV*6024A**	58MV(B,C)120−20	47,000	11.5	13.5
3465419	38HDR048−62	CNPV*6024A**	58PH*135−20	47,000	12.0	14.5
3465415	38HDR048−62	CNPV*6024A**+TDR		47,500	11.0	13.0
3465454	38HDR048−62	CSPH*4812A**	58CV(A,X)090−16	46,500	11.5	13.5
3465455	38HDR048−62	CSPH*4812A**	58CV(A,X)110−20	46,500	11.5	13.5
3465456	38HDR048−62	CSPH*4812A**	58CV(A,X)135−22	46,500	11.5	13.5
3465457	38HDR048−62	CSPH*4812A**	58CV(A,X)155−22	46,500	11.5	13.5
3465461	38HDR048−62	CSPH*4812A**	58MEB080−16	46,500	11.5	14.0
3465462	38HDR048−62	CSPH*4812A**	58MEB100−20	46,500	11.5	14.0
3465463	38HDR048−62	CSPH*4812A**	58MEB120−20	46,500	11.5	14.0
3465451	38HDR048−62	CSPH*4812A**	58MV(B,C)080−20	46,500	11.5	13.5
3465452	38HDR048−62	CSPH*4812A**	58MV(B,C)100−20	46,500	11.5	13.5
3465453	38HDR048−62	CSPH*4812A**	58MV(B,C)120−20	46,500	11.5	13.5
3465458	38HDR048−62	CSPH*4812A**	58PH*090−16	46,500	11.5	14.0
3465459	38HDR048−62	CSPH*4812A**	58PH*110−20	46,500	11.5	14.0
3465460	38HDR048−62	CSPH*4812A**	58PH*135−20	46,500	11.5	14.0
3465450	38HDR048−62	CSPH*4812A**+TDR		47,000	11.0	13.0
3465468	38HDR048−62	CSPH*6012A**	58CV(A,X)090−16	47,000	11.5	13.5
3465469	38HDR048−62	CSPH*6012A**	58CV(A,X)110−20	47,000	11.5	14.0
3465470	38HDR048−62	CSPH*6012A**	58CV(A,X)135−22	47,000	11.5	14.0
3465471	38HDR048−62	CSPH*6012A**	58CV(A,X)155−22	47,000	11.5	14.0
3465475	38HDR048−62	CSPH*6012A**	58MEB080−16	47,000	12.0	14.5
3465476	38HDR048−62	CSPH*6012A**	58MEB100−20	47,000	12.0	14.5
3465477	38HDR048−62	CSPH*6012A**	58MEB120−20	47,000	12.0	14.5
3465465	38HDR048−62	CSPH*6012A**	58MV(B,C)080−20	47,000	11.5	13.5
3465466	38HDR048−62	CSPH*6012A**	58MV(B,C)100−20	47,000	11.5	13.5
3465467	38HDR048−62	CSPH*6012A**	58MV(B,C)120−20	47,000	11.5	13.5
3465472	38HDR048−62	CSPH*6012A**	58PH*090−16	47,000	12.0	14.5
3465473	38HDR048−62	CSPH*6012A**	58PH*110−20	47,000	12.0	14.5
3465474	38HDR048−62	CSPH*6012A**	58PH*135−20	47,000	12.0	14.5
3465464	38HDR048−62	CSPH*6012A**+TDR		47,500	11.0	13.0
3465482	38HDR048−62	FE4AN(B,F)005+UI		47,000	11.5	13.5
3465483	38HDR048−62	FE4ANB006+UI		47,500	11.5	14.0
3465484	38HDR048−62	FV4BN(B,F)005		47,000	11.5	14.0
3465485	38HDR048−62	FV4BNB006		47,500	11.5	14.0
3465480	38HDR048−62	FX4CN(B,F)048		47,000	11.5	13.5
3465481	38HDR048−62	FX4CN(B,F)060		47,500	11.5	14.0
3465479	38HDR048−62	FY4ANB060		47,500	11.0	13.0
3465478	38HDR048−62	FY4ANF048		47,000	11.0	13.0
3465024	38HDR060−32	†CNPV*6024A**+TDR		57,000	11.0	13.0
3465810	38HDR060−32	40QAC060−3		56,000	11.0	13.0
3465026	38HDR060−32	CAP**6021A**	58CV(A,X)110−20	56,000	11.0	13.2
3465029	38HDR060−32	CAP**6021A**	58MEB100−20	56,000	11.0	13.5
3465027	38HDR060−32	CAP**6021A**	58PH*090−16	56,000	11.0	13.2
3465028	38HDR060−32	CAP**6021A**	58PH*110−20	56,000	11.0	13.5
3465025	38HDR060−32	CAP**6021A**+TDR		57,000	11.0	13.0
3465031	38HDR060−32	CAP**6024A**	58CV(A,X)135−22	56,000	11.0	13.5
3465032	38HDR060−32	CAP**6024A**	58CV(A,X)155−22	56,000	11.0	13.5

See notes on page 26

COMBINATION RATINGS (CONT.)

ARI Ref. No.	Model Number	Indoor Model	Furnace Model	Capacity	EER	SEER
3465034	38HDR060−32	CAP**6024A**	58MEB120−20	56,000	11.0	13.5
3465033	38HDR060−32	CAP**6024A**	58PH*135−20	56,000	11.0	13.5
3465030	38HDR060−32	CAP**6024A**+TDR		57,000	11.0	13.0
3465040	38HDR060−32	CNPH*6024A**	58CV(A,X)110−20	56,000	11.0	13.2
3465041	38HDR060−32	CNPH*6024A**	58CV(A,X)135−22	56,000	11.0	13.5
3465042	38HDR060−32	CNPH*6024A**	58CV(A,X)155−22	56,000	11.0	13.5
3465046	38HDR060−32	CNPH*6024A**	58MEB080−16	56,000	11.0	13.2
3465047	38HDR060−32	CNPH*6024A**	58MEB100−20	56,000	11.0	13.5
3465048	38HDR060−32	CNPH*6024A**	58MEB120−20	56,000	11.0	13.5
3465043	38HDR060−32	CNPH*6024A**	58PH*090−16	56,000	11.0	13.2
3465044	38HDR060−32	CNPH*6024A**	58PH*110−20	56,000	11.0	13.5
3465045	38HDR060−32	CNPH*6024A**	58PH*135−20	56,000	11.0	13.5
3465039	38HDR060−32	CNPH*6024A**+TDR		57,000	11.0	13.0
3465035	38HDR060−32	CNPV*6024A**	58CV(A,X)135−22	56,000	11.0	13.5
3465036	38HDR060−32	CNPV*6024A**	58CV(A,X)155−22	56,000	11.0	13.5
3465038	38HDR060−32	CNPV*6024A**	58MEB120−20	56,000	11.0	13.5
3465037	38HDR060−32	CNPV*6024A**	58PH*135−20	56,000	11.0	13.5
3465051	38HDR060−32	CSPH*6012A**	58CV(A,X)110−20	56,000	11.0	13.5
3465052	38HDR060−32	CSPH*6012A**	58CV(A,X)135−22	56,000	11.0	13.5
3465053	38HDR060−32	CSPH*6012A**	58CV(A,X)155−22	56,000	11.0	13.5
3465057	38HDR060−32	CSPH*6012A**	58MEB080−16	56,000	11.0	13.2
3465058	38HDR060−32	CSPH*6012A**	58MEB100−20	56,000	11.0	13.5
3465059	38HDR060−32	CSPH*6012A**	58MEB120−20	56,000	11.0	13.5
3465050	38HDR060−32	CSPH*6012A**	58MV(B,C)120−20	56,000	11.0	13.2
3465054	38HDR060−32	CSPH*6012A**	58PH*090−16	56,000	11.0	13.5
3465055	38HDR060−32	CSPH*6012A**	58PH*110−20	56,000	11.0	13.5
3465056	38HDR060−32	CSPH*6012A**	58PH*135−20	56,000	11.0	13.5
3465049	38HDR060−32	CSPH*6012A**+TDR		57,000	11.0	13.0
3465062	38HDR060−32	FE4ANB006+UI		57,500	11.0	13.5
3465063	38HDR060−32	FV4BNB006		57,500	11.0	13.5
3465061	38HDR060−32	FX4CN(B,F)060		57,500	11.0	13.5
3465060	38HDR060−32	FY4ANB060		57,000	11.0	13.0
3465064	38HDR060−52	†CNPV*6024A**+TDR		57,000	11.0	13.0
3465811	38HDR060−52	40QAC060−3		56,000	11.0	13.0
3465066	38HDR060−52	CAP**6021A**	58CV(A,X)110−20	56,000	11.0	13.2
3465069	38HDR060−52	CAP**6021A**	58MEB100−20	56,000	11.0	13.5
3465067	38HDR060−52	CAP**6021A**	58PH*090−16	56,000	11.0	13.2
3465068	38HDR060−52	CAP**6021A**	58PH*110−20	56,000	11.0	13.5
3465065	38HDR060−52	CAP**6021A**+TDR		57,000	11.0	13.0
3465071	38HDR060−52	CAP**6024A**	58CV(A,X)135−22	56,000	11.0	13.5
3465072	38HDR060−52	CAP**6024A**	58CV(A,X)155−22	56,000	11.0	13.5
3465074	38HDR060−52	CAP**6024A**	58MEB120−20	56,000	11.0	13.5
3465073	38HDR060−52	CAP**6024A**	58PH*135−20	56,000	11.0	13.5
3465070	38HDR060−52	CAP**6024A**+TDR		57,000	11.0	13.0
3465080	38HDR060−52	CNPH*6024A**	58CV(A,X)110−20	56,000	11.0	13.2
3465081	38HDR060−52	CNPH*6024A**	58CV(A,X)135−22	56,000	11.0	13.5
3465082	38HDR060−52	CNPH*6024A**	58CV(A,X)155−22	56,000	11.0	13.5
3465086	38HDR060−52	CNPH*6024A**	58MEB080−16	56,000	11.0	13.2
3465087	38HDR060−52	CNPH*6024A**	58MEB100−20	56,000	11.0	13.5
3465088	38HDR060−52	CNPH*6024A**	58MEB120−20	56,000	11.0	13.5
3465083	38HDR060−52	CNPH*6024A**	58PH*090−16	56,000	11.0	13.2
3465084	38HDR060−52	CNPH*6024A**	58PH*110−20	56,000	11.0	13.5
3465085	38HDR060−52	CNPH*6024A**	58PH*135−20	56,000	11.0	13.5
3465079	38HDR060−52	CNPH*6024A**+TDR		57,000	11.0	13.0
3465075	38HDR060−52	CNPV*6024A**	58CV(A,X)135−22	56,000	11.0	13.5
3465076	38HDR060−52	CNPV*6024A**	58CV(A,X)155−22	56,000	11.0	13.5
3465078	38HDR060−52	CNPV*6024A**	58MEB120−20	56,000	11.0	13.5
3465077	38HDR060−52	CNPV*6024A**	58PH*135−20	56,000	11.0	13.5
3465091	38HDR060−52	CSPH*6012A**	58CV(A,X)110−20	56,000	11.0	13.5
3465092	38HDR060−52	CSPH*6012A**	58CV(A,X)135−22	56,000	11.0	13.5
3465093	38HDR060−52	CSPH*6012A**	58CV(A,X)155−22	56,000	11.0	13.5
3465097	38HDR060−52	CSPH*6012A**	58MEB080−16	56,000	11.0	13.2
3465098	38HDR060−52	CSPH*6012A**	58MEB100−20	56,000	11.0	13.5
3465099	38HDR060−52	CSPH*6012A**	58MEB120−20	56,000	11.0	13.5
3465090	38HDR060−52	CSPH*6012A**	58MV(B,C)120−20	56,000	11.0	13.2
3465094	38HDR060−52	CSPH*6012A**	58PH*090−16	56,000	11.0	13.5
3465095	38HDR060−52	CSPH*6012A**	58PH*110−20	56,000	11.0	13.5
3465096	38HDR060−52	CSPH*6012A**	58PH*135−20	56,000	11.0	13.5
3465089	38HDR060−52	CSPH*6012A**+TDR		57,000	11.0	13.0
3465102	38HDR060−52	FE4ANB006+UI		57,500	11.0	13.5
3465103	38HDR060−52	FV4BNB006		57,500	11.0	13.5
3465101	38HDR060−52	FX4CN(B,F)060		57,500	11.0	13.5
3465100	38HDR060−52	FY4ANB060		57,000	11.0	13.0
3465104	38HDR060−62	†CNPV*6024A**+TDR		57,000	11.0	13.0
3465812	38HDR060−62	40QAC060−3		56,000	11.0	13.0
3465106	38HDR060−62	CAP**6021A**	58CV(A,X)110−20	56,000	11.0	13.2
3465109	38HDR060−62	CAP**6021A**	58MEB100−20	56,000	11.0	13.5

See notes on page 26

COMBINATION RATINGS (CONT.)

ARI Ref. No.	Model Number	Indoor Model	Furnace Model	Capacity	EER	SEER
3465107	38HDR060−62	CAP**6021A**	58PH*090−16	56,000	11.0	13.2
3465108	38HDR060−62	CAP**6021A**	58PH*110−20	56,000	11.0	13.5
3465105	38HDR060−62	CAP**6021A**+TDR		57,000	11.0	13.0
3465111	38HDR060−62	CAP**6024A**	58CV(A,X)135−22	56,000	11.0	13.5
3465112	38HDR060−62	CAP**6024A**	58CV(A,X)155−22	56,000	11.0	13.5
3465114	38HDR060−62	CAP**6024A**	58MEB120−20	56,000	11.0	13.5
3465113	38HDR060−62	CAP**6024A**	58PH*135−20	56,000	11.0	13.5
3465110	38HDR060−62	CAP**6024A**+TDR		57,000	11.0	13.0
3465120	38HDR060−62	CNPH*6024A**	58CV(A,X)110−20	56,000	11.0	13.2
3465121	38HDR060−62	CNPH*6024A**	58CV(A,X)135−22	56,000	11.0	13.5
3465122	38HDR060−62	CNPH*6024A**	58CV(A,X)155−22	56,000	11.0	13.5
3465126	38HDR060−62	CNPH*6024A**	58MEB080−16	56,000	11.0	13.2
3465127	38HDR060−62	CNPH*6024A**	58MEB100−20	56,000	11.0	13.5
3465128	38HDR060−62	CNPH*6024A**	58MEB120−20	56,000	11.0	13.5
3465123	38HDR060−62	CNPH*6024A**	58PH*090−16	56,000	11.0	13.2
3465124	38HDR060−62	CNPH*6024A**	58PH*110−20	56,000	11.0	13.5
3465125	38HDR060−62	CNPH*6024A**	58PH*135−20	56,000	11.0	13.5
3465119	38HDR060−62	CNPH*6024A**+TDR		57,000	11.0	13.0
3465115	38HDR060−62	CNPV*6024A**	58CV(A,X)135−22	56,000	11.0	13.5
3465116	38HDR060−62	CNPV*6024A**	58CV(A,X)155−22	56,000	11.0	13.5
3465118	38HDR060−62	CNPV*6024A**	58MEB120−20	56,000	11.0	13.5
3465117	38HDR060−62	CNPV*6024A**	58PH*135−20	56,000	11.0	13.5
3465131	38HDR060−62	CSPH*6012A**	58CV(A,X)110−20	56,000	11.0	13.5
3465132	38HDR060−62	CSPH*6012A**	58CV(A,X)135−22	56,000	11.0	13.5
3465133	38HDR060−62	CSPH*6012A**	58CV(A,X)155−22	56,000	11.0	13.5
3465137	38HDR060−62	CSPH*6012A**	58MEB080−16	56,000	11.0	13.2
3465138	38HDR060−62	CSPH*6012A**	58MEB100−20	56,000	11.0	13.5
3465139	38HDR060−62	CSPH*6012A**	58MEB120−20	56,000	11.0	13.5
3465130	38HDR060−62	CSPH*6012A**	58MV(B,C)120−20	56,000	11.0	13.2
3465134	38HDR060−62	CSPH*6012A**	58PH*090−16	56,000	11.0	13.5
3465135	38HDR060−62	CSPH*6012A**	58PH*110−20	56,000	11.0	13.5
3465136	38HDR060−62	CSPH*6012A**	58PH*135−20	56,000	11.0	13.5
3465129	38HDR060−62	CSPH*6012A**+TDR		57,000	11.0	13.0
3465142	38HDR060−62	FE4ANB006+UI		57,500	11.0	13.5
3465143	38HDR060−62	FV4BNB006		57,500	11.0	13.5
3465141	38HDR060−62	FX4CN(B,F)060		57,500	11.0	13.5
3465140	38HDR060−62	FY4ANB060		57,000	11.0	13.0

† Tested combination

EER — Energy Efficiency Ratio

SEER — Seasonal Energy Efficiency Ratio

TDR — Time−Delay Relay. In most cases, only 1 method should be used to achieve TDR function. Using more than 1 method in a system may cause degradation in performance. Use either the accessory Time−Delay Relay KAATD0101TDR or a furnace equipped with TDR. Most Carrier furnaces are equipped with TDR.

TXV — Thermostatic Expansion Valve

NOTES:

1. Ratings are net values reflecting the effects of circulating fan motor heat. Supplemental electric heat is not included.
2. Tested outdoor/indoor combinations have been tested in accordance with DOE test procedures for central air conditioners. Ratings for other combinations are determined under DOE computer simulation procedures.
3. Determine actual CFM values obtainable for your system by referring to fan performance data in fan coil or furnace coil literature.
4. Do not apply with capillary tube coils as performance and reliability are significantly affected.

DETAILED COOLING CAPACITIES*

EVAPORATOR AIR		CONDENSER ENTERING AIR TEMPERATURES °F (°C)																	
		75 (23.9)			85 (29.4)			95 (35)			105 (40.6)			115 (46.1)			125 (51.7)		
CFM	EWB °F (°C)	Capacity MBtuh†		Total System KW**	Capacity MBtuh†		Total System KW**	Capacity MBtuh†		Total System KW**	Capacity MBtuh†		Total System KW**	Capacity MBtuh†		Total System KW**	Capacity MBtuh†		Total System KW**
		Total	Sens‡		Total	Sens‡		Total	Sens‡		Total	Sens‡		Total	Sens‡		Total	Sens‡	
38HDR018 Outdoor Section With CNPV*1814A** Indoor Section																			
525	72 (22.2)	20.28	9.40	1.22	19.31	9.07	1.36	18.30	8.73	1.52	17.26	8.38	1.69	16.14	8.01	1.87	14.90	7.61	2.07
	67(19.4)	18.53	11.50	1.22	17.65	11.17	1.36	16.72	10.82	1.52	15.76	10.47	1.69	14.72	10.09	1.87	13.59	9.69	2.07
	62 (16.7)	16.93	13.58	1.23	16.13	13.24	1.37	15.29	12.89	1.52	14.43	12.52	1.69	13.57	13.57	1.87	12.71	12.71	2.07
	57 (13.9)	16.35	16.35	1.23	15.72	15.72	1.37	15.05	15.05	1.52	14.34	14.34	1.69	13.57	13.57	1.87	12.71	12.71	2.07
600	72(22.2)	20.65	9.87	1.25	19.63	9.53	1.39	18.59	9.18	1.54	17.50	8.83	1.71	16.34	8.46	1.90	15.05	8.05	2.10
	67(19.4)	18.90	12.25	1.25	17.97	11.91	1.39	17.00	11.56	1.55	16.00	11.20	1.72	14.93	10.82	1.90	13.75	10.41	2.10
	62 (16.7)	17.33	14.61	1.25	16.51	14.26	1.39	15.67	15.61	1.55	14.91	14.91	1.72	14.08	14.08	1.90	13.16	13.16	2.10
	57 (13.9)	17.07	17.07	1.25	16.39	16.39	1.39	15.67	15.67	1.55	14.91	14.91	1.72	14.08	14.08	1.90	13.16	13.16	2.10
675	72 (22.2)	20.91	10.30	1.27	19.86	9.96	1.41	18.78	9.61	1.57	17.67	9.26	1.74	16.47	8.88	1.93	15.15	8.46	2.13
	67 (19.4)	19.16	12.97	1.27	18.20	12.62	1.42	17.20	12.27	1.57	16.18	11.90	1.74	15.07	11.52	1.93	13.87	11.09	2.13
	62 (16.7)	17.70	17.52	1.28	16.94	16.94	1.42	16.17	16.17	1.57	15.37	15.37	1.74	14.49	14.49	1.93	13.52	13.52	2.13
	57(13.9)	17.67	17.67	1.28	16.94	16.94	1.42	16.17	16.17	1.57	15.37	15.37	1.74	14.49	14.49	1.93	13.52	13.52	2.13

COOLING INDOOR MODEL	CAPACITY	POWER	FURNACE MODEL
*CNPV*1814A**	1.00	1.00	
40QAC(Q)024–3	1.06	1.01	
CAP**1814A**	1.00	1.01	
CAP**2414A**	1.02	1.02	
CAP**2417A**	1.02	1.02	
CNPF*2418A**	1.02	1.02	
CNPH*2417A**	1.02	1.02	
CNPV*2414A**	1.02	1.02	
CNPV*2417A**	1.02	1.02	
CSPH*2412A**	1.02	1.02	
FE4ANF002	1.02	0.98	
FF1ENP018	1.00	1.05	
FF1ENP024	1.02	1.07	
FV4BNF002	1.02	0.99	
FX4CNF018	1.00	0.96	
FX4CNF024	1.02	0.98	
FY4ANF018	1.00	1.05	
FY4ANF024	1.02	1.07	
CAP**1814A**	1.00	0.96	58CV(A,X)070–12
CAP**2414A**	1.02	0.98	58CV(A,X)070–12
CNPH*2417A**	1.02	0.98	58CV(A,X)070–12
CNPV*1814A**	0.10	0.10	58CV(A,X)070–12
CNPV*2414A**	1.02	0.98	58CV(A,X)070–12
CSPH*2412A**	1.02	0.98	58CV(A,X)070–12
CAP**2417A**	1.02	0.98	58CV(A,X)090–16
CNPH*2417A**	1.02	0.98	58CV(A,X)090–16
CNPV*2417A**	1.02	0.98	58CV(A,X)090–16
CSPH*2412A**	1.02	0.98	58CV(A,X)090–16
CAP**2417A**	1.02	0.94	58MEB040–12
CNPH*2417A**	1.02	0.94	58MEB040–12
CNPV*2417A**	1.02	0.94	58MEB040–12
CSPH*2412A**	1.02	0.94	58MEB040–12
CAP**2417A**	1.02	0.94	58MEB060–12
CNPH*2417A**	1.02	0.94	58MEB060–12
CNPV*2417A**	1.02	0.94	58MEB060–12
CSPH*2412A**	1.02	0.94	58MEB060–12
CAP**2417A**	1.02	0.98	58MV(B,C)060–14
CNPH*2417A**	1.02	0.98	58MV(B,C)060–14
CNPV*2417A**	1.02	0.98	58MV(B,C)060–14
CSPH*2412A**	1.02	0.98	58MV(B,C)060–14
CNPH*2417A**	1.02	0.98	58MV(B,C)080–14

COOLING INDOOR MODEL	CAPACITY	POWER	FURNACE MODEL
CSPH*2412A**	1.02	0.98	58MV(B,C)080–14
CNPH*2417A**	1.02	0.98	58MVB040–14
CSPH*2412A**	1.02	0.98	58MVB040–14
CAP**1814A**	0.10	0.10	58PH*045–08
CAP**2414A**	1.02	0.94	58PH*045–08
CNPH*2417A**	1.02	0.94	58PH*045–08
CNPV*1814A**	1.00	0.96	58PH*045–08
CNPV*2414A**	1.02	0.94	58PH*045–08
CSPH*2412A**	1.02	0.94	58PH*045–08

See notes on pg. 34

DETAILED COOLING CAPACITIES* (CONT.)

EVAPORATOR AIR		CONDENSER ENTERING AIR TEMPERATURES °F (°C)																	
		75 (23.9)			85 (29.4)			95 (35)			105 (40.6)			115 (46.1)			125 (51.7)		
CFM	EWB °F (°C)	Capacity MBtuh†		Total System KW**	Capacity MBtuh†		Total System KW**	Capacity MBtuh†		Total System KW**	Capacity MBtuh†		Total System KW**	Capacity MBtuh†		Total System KW**	Capacity MBtuh†		Total System KW**
		Total	Sens‡		Total	Sens‡		Total	Sens‡		Total	Sens‡		Total	Sens‡		Total	Sens‡	
38HDR024 Outdoor Section With CNPV*2414A** Indoor Section																			
700	72 (22.2)	28.11	13.59	1.69	26.70	13.09	1.89	25.17	12.55	2.10	23.54	11.98	2.33	21.76	11.38	2.58	19.78	10.71	2.84
	67(19.4)	25.68	16.61	1.68	24.41	16.11	1.87	23.04	15.58	2.09	21.58	15.02	2.32	19.98	14.42	2.57	18.21	13.77	2.83
	62 (16.7)	23.47	19.61	1.67	22.34	19.11	1.86	21.13	18.58	2.08	19.86	18.01	2.31	18.57	18.57	2.55	17.23	17.23	2.82
	57 (13.9)	22.67	22.67	1.67	21.77	21.77	1.86	20.81	20.81	2.07	19.75	19.75	2.31	18.57	18.57	2.55	17.23	17.23	2.82
800	72(22.2)	28.62	14.25	1.73	27.14	13.73	1.93	25.53	13.18	2.14	23.83	12.61	2.37	21.98	11.99	2.62	19.92	11.32	2.88
	67(19.4)	26.18	17.67	1.72	24.84	17.16	1.91	23.40	16.61	2.13	21.88	16.05	2.36	20.22	15.43	2.61	18.38	14.76	2.87
	62 (16.7)	24.02	21.07	1.71	22.85	20.54	1.90	21.63	21.51	2.12	20.48	20.48	2.35	19.20	19.20	2.60	17.75	17.75	2.86
	57 (13.9)	23.64	23.64	1.71	22.68	22.68	1.90	21.62	21.62	2.12	20.48	20.48	2.35	19.20	19.20	2.60	17.75	17.75	2.86
900	72 (22.2)	28.99	14.87	1.77	27.45	14.34	1.96	25.78	13.78	2.18	24.03	13.20	2.41	22.12	12.57	2.66	20.00	11.89	2.92
	67 (19.4)	26.54	18.68	1.76	25.15	18.16	1.95	23.66	17.61	2.17	22.09	17.03	2.40	20.38	16.40	2.65	18.50	15.71	2.91
	62 (16.7)	24.51	22.41	1.75	23.41	23.41	1.94	22.28	22.28	2.16	21.06	21.06	2.39	19.70	19.70	2.64	18.15	18.15	2.91
	57(13.9)	24.45	24.45	1.75	23.41	23.41	1.94	22.28	22.28	2.16	21.06	21.06	2.39	19.70	19.70	2.64	18.15	18.15	2.91

COOLING INDOOR MODEL	CAPACITY	POWER	FURNACE MODEL
*CNPV*2414A**	1.00	1.00	
40QAC024–3	0.97	0.93	
CAP**2414A**	1.00	1.00	
CAP**2417A**	1.00	1.00	
CAP**3014A**	1.01	1.01	
CAP**3017A**	1.01	1.01	
CNPF*2418A**	1.00	1.00	
CNPH*2417A**	1.00	1.00	
CNPH*3017A**	1.01	1.01	
CNPV*2417A**	1.00	1.00	
CNPV*3014A**	1.01	1.01	
CNPV*3017A**	1.01	1.01	
CSPH*2412A**	1.00	1.00	
CSPH*3012A**	1.01	1.01	
FE4AN(B,F)003	1.02	0.93	
FE4ANF002	1.01	0.92	
FE5ANB004	1.03	0.94	
FF1ENP024	0.97	0.97	
FF1ENP025	1.00	0.96	
FF1ENP030	0.98	0.98	
FF1ENP031	1.01	0.96	
FF1ENP037	1.02	0.97	
FV4BN(B,F)003	1.02	0.93	
FV4BNF002	1.01	0.92	
FV4CN(B,F)003	1.02	0.93	
FV4CNF002	1.01	0.92	
FX4CNF024	1.00	0.96	
FX4CNF030	1.02	0.97	
FY4ANF024	0.99	0.99	
FY4ANF030	1.01	1.01	
CAP**2414A**	1.00	0.96	58CV(A,X)070–12
CAP**3014A**	1.00	0.96	58CV(A,X)070–12
CNPH*2417A**	1.00	0.96	58CV(A,X)070–12
CNPH*3017A**	1.00	0.96	58CV(A,X)070–12
CNPV*2414A**	1.00	0.96	58CV(A,X)070–12
CNPV*3014A**	1.00	0.96	58CV(A,X)070–12
CSPH*2412A**	1.00	0.96	58CV(A,X)070–12
CSPH*3012A**	1.01	0.96	58CV(A,X)070–12
CAP**2417A**	1.00	0.96	58CV(A,X)090–16
CAP**3017A**	1.01	0.96	58CV(A,X)090–16
CNPH*2417A**	1.00	0.96	58CV(A,X)090–16
CNPH*3017A**	1.01	0.96	58CV(A,X)090–16

COOLING INDOOR MODEL	CAPACITY	POWER	FURNACE MODEL
CNPV*2417A**	1.00	0.96	58CV(A,X)090–16
CNPV*3017A**	1.01	0.96	58CV(A,X)090–16
CSPH*2412A**	1.00	0.96	58CV(A,X)090–16
CSPH*3012A**	1.01	0.96	58CV(A,X)090–16
CNPH*2417A**	1.00	0.96	58CV(A,X)110–20
CNPH*3017A**	1.01	0.96	58CV(A,X)110–20
CSPH*2412A**	1.00	0.96	58CV(A,X)110–20
CSPH*3012A**	1.01	0.96	58CV(A,X)110–20
CNPH*2417A**	1.00	0.96	58CV(A,X)135–22
CNPH*3017A**	1.01	0.96	58CV(A,X)135–22
CSPH*2412A**	1.00	0.96	58CV(A,X)135–22
CSPH*3012A**	1.01	0.96	58CV(A,X)135–22
CNPH*2417A**	1.00	0.96	58CV(A,X)155–22
CNPH*3017A**	1.01	0.96	58CV(A,X)155–22
CSPH*2412A**	1.00	0.96	58CV(A,X)155–22
CSPH*3012A**	1.01	0.96	58CV(A,X)155–22
CAP**2417A**	1.00	0.92	58MEB040–12
CAP**3017A**	1.01	0.92	58MEB040–12
CNPH*2417A**	1.00	0.92	58MEB040–12
CNPH*3017A**	1.01	0.92	58MEB040–12
CNPV*2417A**	1.00	0.92	58MEB040–12
CNPV*3017A**	1.01	0.92	58MEB040–12
CSPH*2412A**	1.00	0.92	58MEB040–12
CSPH*3012A**	1.01	0.92	58MEB040–12
CAP**2417A**	1.00	0.92	58MEB060–12
CAP**3017A**	1.01	0.92	58MEB060–12
CNPH*2417A**	1.00	0.92	58MEB060–12
CNPH*3017A**	1.01	0.92	58MEB060–12
CNPV*2417A**	1.00	0.92	58MEB060–12
CNPV*3017A**	1.01	0.92	58MEB060–12
CSPH*2412A**	1.00	0.92	58MEB060–12
CSPH*3012A**	1.01	0.92	58MEB060–12
CAP**2417A**	1.00	0.92	58MEB080–12
CAP**3017A**	1.01	0.92	58MEB080–12
CNPH*2417A**	1.00	0.92	58MEB080–12
CNPH*3017A**	1.01	0.92	58MEB080–12
CNPV*2417A**	1.00	0.92	58MEB080–12
CNPV*3017A**	1.01	0.92	58MEB080–12
CSPH*2412A**	1.00	0.92	58MEB080–12
CSPH*3012A**	1.01	0.92	58MEB080–12
CAP**2417A**	1.00	0.96	58MV(B,C)060–14
CAP**3017A**	1.01	0.96	58MV(B,C)060–14

COOLING INDOOR MODEL	CAPACITY	POWER	FURNACE MODEL
CNPH*2417A**	1.00	0.96	58MV(B,C)060–14
CNPH*3017A**	1.01	0.96	58MV(B,C)060–14
CNPV*2417A**	1.00	0.96	58MV(B,C)060–14
CNPV*3017A**	1.01	0.96	58MV(B,C)060–14
CSPH*2412A**	1.00	0.96	58MV(B,C)060–14
CSPH*3012A**	1.01	0.96	58MV(B,C)060–14
CNPH*2417A**	1.00	0.96	58MV(B,C)080–14
CNPH*3017A**	1.00	0.96	58MV(B,C)080–14
CSPH*2412A**	1.00	0.96	58MV(B,C)080–14
CSPH*3012A**	1.01	0.96	58MV(B,C)080–14
CNPH*2417A**	0.99	0.95	58MV(B,C)080–20
CNPH*3017A**	1.00	0.96	58MV(B,C)080–20
CSPH*2412A**	1.00	0.96	58MV(B,C)080–20
CSPH*3012A**	1.00	0.96	58MV(B,C)080–20
CNPH*2417A**	1.00	0.96	58MV(B,C)100–20
CNPH*3017A**	1.01	0.96	58MV(B,C)100–20
CSPH*2412A**	1.00	0.96	58MV(B,C)100–20
CSPH*3012A**	1.01	0.96	58MV(B,C)100–20
CNPH*2417A**	1.00	0.96	58MV(B,C)120–20
CNPH*3017A**	1.01	0.96	58MV(B,C)120–20
CSPH*2412A**	1.00	0.96	58MV(B,C)120–20
CSPH*3012A**	1.01	0.96	58MV(B,C)120–20
CNPH*2417A**	1.00	0.96	58MVB040–14
CNPH*3017A**	1.01	0.96	58MVB040–14
CSPH*2412A**	1.00	0.96	58MVB040–14
CSPH*3012A**	1.01	0.96	58MVB040–14
CAP**2414A**	1.00	0.96	58PH*045–08
CAP**3014A**	1.01	0.92	58PH*045–08
CNPH*2417A**	1.00	0.96	58PH*045–08
CNPH*3017A**	1.01	0.92	58PH*045–08
CNPV*2414A**	1.00	0.96	58PH*045–08
CNPV*3014A**	1.01	0.96	58PH*045–08
CSPH*2412A**	1.00	0.96	58PH*045–08
CSPH*3012A**	1.01	0.92	58PH*045–08

See notes on pg. 34

DETAILED COOLING CAPACITIES* (CONT.)

EVAPORATOR AIR		CONDENSER ENTERING AIR TEMPERATURES °F (°C)																	
		75 (23.9)			85 (29.4)			95 (35)			105 (40.6)			115 (46.1)			125 (51.7)		
CFM	EWB °F (°C)	Capacity MBtuh†		Total System KW**	Capacity MBtuh†		Total System KW**	Capacity MBtuh†		Total System KW**	Capacity MBtuh†		Total System KW**	Capacity MBtuh†		Total System KW**	Capacity MBtuh†		Total System KW**
		Total	Sens‡		Total	Sens‡		Total	Sens‡		Total	Sens‡		Total	Sens‡		Total	Sens‡	
38HDR030 Outdoor Section With CNPV*3014A** Indoor Section																			
875	72 (22.2)	33.74	16.03	2.06	32.29	15.52	2.29	30.76	14.99	2.54	29.12	14.43	2.81	27.36	13.84	3.11	25.42	13.19	3.44
	67(19.4)	30.65	19.58	2.06	29.32	19.06	2.29	27.90	18.51	2.54	26.39	17.94	2.81	24.76	17.34	3.11	22.97	16.69	3.43
	62 (16.7)	28.07	23.01	2.07	26.73	22.59	2.29	25.47	22.03	2.54	24.10	21.45	2.81	22.76	22.72	3.11	21.45	21.45	3.43
	57 (13.9)	27.14	27.14	2.07	26.16	26.16	2.29	25.11	25.11	2.53	24.01	24.01	2.80	22.78	22.78	3.11	21.43	21.43	3.43
1000	72(22.2)	34.29	16.79	2.11	32.87	16.29	2.34	31.28	15.69	2.58	29.58	15.18	2.86	27.57	14.54	3.17	25.64	13.91	3.49
	67(19.4)	31.27	20.81	2.11	29.84	20.29	2.34	28.40	19.75	2.58	26.82	19.17	2.86	24.99	18.52	3.16	23.21	17.87	3.49
	62 (16.7)	28.72	24.92	2.11	27.38	24.26	2.34	26.11	26.11	2.58	24.94	24.94	2.85	23.54	23.54	3.16	22.22	22.22	3.48
	57 (13.9)	28.28	28.28	2.11	27.23	27.23	2.34	26.13	26.13	2.58	24.94	24.94	2.85	23.54	23.54	3.16	22.22	22.22	3.48
1125	72 (22.2)	34.76	17.52	2.16	33.30	17.00	2.39	31.65	16.46	2.63	29.90	15.89	2.91	28.03	15.27	3.21	25.95	14.60	3.53
	67 (19.4)	31.86	21.48	2.16	30.25	21.46	2.38	28.76	20.92	2.63	27.14	20.32	2.90	25.39	19.69	3.21	23.44	18.98	3.54
	62 (16.7)	29.27	29.04	2.16	28.12	28.12	2.38	26.98	26.98	2.63	25.71	25.71	2.90	24.35	24.35	3.20	22.84	22.84	3.53
	57(13.9)	29.23	29.23	2.16	28.13	28.13	2.38	26.99	26.99	2.63	25.71	25.71	2.90	24.23	24.23	3.21	22.85	22.85	3.53

COOLING INDOOR MODEL	CAPACITY	POWER	FURNACE MODEL
*CNPV*3014A**	1.00	1.00	
CAP**3014A**	1.00	1.00	
CAP**3017A**	1.00	1.00	
CAP**3614A**	1.02	1.02	
CAP**3617A**	1.02	1.02	
CAP**3621A**	1.02	1.02	
CNPF*3618A**	1.02	1.02	
CNPH*3017A**	1.00	1.00	
CNPH*3617A**	1.02	1.02	
CNPV*3017A**	1.00	1.00	
CNPV*3617A**	1.02	1.02	
CNPV*3621A**	1.02	1.02	
CSPH*3012A**	1.00	1.00	
CSPH*3612A**	1.02	1.02	
40QAC(Q)036–3	1.04	1.06	
FE4AN(B,F)003	1.02	0.98	
FE4AN(B,F)005	1.04	0.91	
FE4ANF002	1.02	0.98	
FE5ANB004	1.00	0.88	
FF1ENP030	1.00	1.00	
FF1ENP036	1.02	1.02	
FV4BN(B,F)003	1.03	0.98	
FV4BN(B,F)005	1.04	0.99	
FV4BNF002	1.02	0.98	
FX4CN(B,F)036	1.02	0.98	
FX4CNF030	1.00	0.96	
FY4ANF030	1.00	1.00	
FY4ANF036	1.02	1.02	
CAP**3014A**	1.00	0.96	58CV(A,X)070–12
CAP**3614A**	1.02	0.98	58CV(A,X)070–12
CNPH*3017A**	1.00	0.96	58CV(A,X)070–12
CNPH*3617A**	1.02	0.98	58CV(A,X)070–12
CNPV*3014A**	1.02	0.98	58CV(A,X)070–12
CSPH*3012A**	1.00	0.96	58CV(A,X)070–12
CSPH*3612A**	1.02	0.98	58CV(A,X)070–12
CAP**3017A**	1.00	0.96	58CV(A,X)090–16
CAP**3617A**	1.02	0.98	58CV(A,X)090–16
CNPH*3017A**	1.00	0.96	58CV(A,X)090–16
CNPH*3617A**	1.02	0.98	58CV(A,X)090–16
CNPV*3017A**	1.00	0.96	58CV(A,X)090–16
CNPV*3617A**	1.02	0.98	58CV(A,X)090–16
CSPH*3012A**	1.00	0.96	58CV(A,X)090–16

COOLING INDOOR MODEL	CAPACITY	POWER	FURNACE MODEL
CSPH*3612A**	1.02	0.98	58CV(A,X)090–16
CAP**3621A**	1.02	0.98	58CV(A,X)110–20
CNPH*3017A**	1.00	0.96	58CV(A,X)110–20
CNPH*3617A**	1.02	0.98	58CV(A,X)110–20
CNPV*3621A**	1.02	0.98	58CV(A,X)110–20
CSPH*3012A**	1.00	0.96	58CV(A,X)110–20
CSPH*3612A**	1.02	0.98	58CV(A,X)110–20
CNPH*3017A**	1.00	0.96	58CV(A,X)135–22
CNPH*3617A**	1.02	0.98	58CV(A,X)135–22
CSPH*3012A**	1.00	0.96	58CV(A,X)135–22
CSPH*3612A**	1.02	0.98	58CV(A,X)135–22
CNPH*3017A**	1.00	0.96	58CV(A,X)155–22
CNPH*3617A**	1.02	0.98	58CV(A,X)155–22
CSPH*3012A**	1.00	0.96	58CV(A,X)155–22
CSPH*3612A**	1.02	0.98	58CV(A,X)155–22
CAP**3017A**	1.00	0.92	58MEB040–12
CAP**3617A**	1.02	0.94	58MEB040–12
CNPH*3017A**	1.00	0.92	58MEB040–12
CNPH*3617A**	1.02	0.94	58MEB040–12
CNPV*3017A**	1.00	0.92	58MEB040–12
CNPV*3617A**	1.02	0.94	58MEB040–12
CSPH*3012A**	1.00	0.92	58MEB040–12
CSPH*3612A**	1.02	0.94	58MEB040–12
CAP**3017A**	1.00	0.92	58MEB060–12
CAP**3617A**	1.02	0.94	58MEB060–12
CNPH*3017A**	1.00	0.92	58MEB060–12
CNPH*3617A**	1.02	0.94	58MEB060–12
CNPV*3017A**	1.00	0.92	58MEB060–12
CNPV*3617A**	1.02	0.94	58MEB060–12
CSPH*3012A**	1.00	0.92	58MEB060–12
CSPH*3612A**	1.02	0.94	58MEB060–12
CAP**3017A**	1.00	0.92	58MEB080–12
CAP**3617A**	1.02	0.94	58MEB080–12
CNPH*3017A**	1.00	0.92	58MEB080–12
CNPH*3617A**	1.02	0.94	58MEB080–12
CNPV*3017A**	1.00	0.92	58MEB080–12
CNPV*3617A**	1.02	0.94	58MEB080–12
CSPH*3012A**	1.00	0.92	58MEB080–12
CSPH*3612A**	1.02	0.94	58MEB080–12
CAP**3017A**	1.00	0.92	58MEB080–16
CAP**3617A**	1.02	0.94	58MEB080–16
CNPH*3017A**	1.00	0.92	58MEB080–16

COOLING INDOOR MODEL	CAPACITY	POWER	FURNACE MODEL
CNPH*3617A**	1.02	0.94	58MEB080–16
CNPV*3017A**	1.00	0.92	58MEB080–16
CNPV*3617A**	1.02	0.94	58MEB080–16
CSPH*3012A**	1.00	0.92	58MEB080–16
CSPH*3612A**	1.02	0.94	58MEB080–16
CAP**3017A**	1.00	0.96	58MV(B,C)060–14
CAP**3617A**	1.02	0.98	58MV(B,C)060–14
CNPH*3017A**	1.00	0.96	58MV(B,C)060–14
CNPH*3617A**	1.02	0.98	58MV(B,C)060–14
CNPV*3017A**	1.00	0.96	58MV(B,C)060–14
CNPV*3617A**	1.02	0.98	58MV(B,C)060–14
CSPH*3012A**	1.00	0.96	58MV(B,C)060–14
CSPH*3612A**	1.02	0.98	58MV(B,C)060–14
CAP**3621A**	1.02	0.98	58MV(B,C)080–14
CNPH*3017A**	1.00	0.96	58MV(B,C)080–14
CNPH*3617A**	1.02	0.98	58MV(B,C)080–14
CNPV*3621A**	1.02	0.98	58MV(B,C)080–14
CSPH*3012A**	1.00	0.96	58MV(B,C)080–14
CSPH*3612A**	1.02	0.98	58MV(B,C)080–14
CAP**3621A**	1.02	0.98	58MV(B,C)080–20
CNPH*3017A**	1.00	0.96	58MV(B,C)080–20
CNPH*3617A**	1.02	0.98	58MV(B,C)080–20
CNPV*3621A**	1.02	0.98	58MV(B,C)080–20
CSPH*3012A**	1.00	0.96	58MV(B,C)080–20
CSPH*3612A**	1.02	0.98	58MV(B,C)080–20
CAP**3621A**	1.02	0.98	58MV(B,C)100–20
CNPH*3017A**	1.00	0.96	58MV(B,C)100–20
CNPH*3617A**	1.02	0.98	58MV(B,C)100–20
CNPV*3621A**	1.02	0.98	58MV(B,C)100–20
CSPH*3012A**	1.00	0.96	58MV(B,C)100–20
CSPH*3612A**	1.02	0.98	58MV(B,C)100–20
CNPH*3017A**	1.00	0.96	58MV(B,C)120–20
CNPH*3617A**	1.02	0.98	58MV(B,C)120–20
CSPH*3012A**	1.00	0.96	58MV(B,C)120–20
CSPH*3612A**	1.02	0.98	58MV(B,C)120–20
CNPH*3617A**	1.02	0.98	58MVB040–14
CSPH*3012A**	1.00	0.96	58MVB040–14
CSPH*3612A**	1.02	0.98	58MVB040–14
CAP**3017A**	1.00	0.96	58PH*070–16
CAP**3617A**	1.02	0.94	58PH*070–16
CNPH*3017A**	1.00	0.96	58PH*070–16
CNPH*3617A**	1.02	0.94	58PH*070–16

DETAILED COOLING CAPACITIES* (CONT.)

38HDR030 Outdoor Section With CNPV*3014A Indoor Section**

COOLING INDOOR MODEL	CAPACITY	POWER	FURNACE MODEL
CNPV*3017A**	1.00	0.96	58PH*070–16
CNPV*3617A**	1.02	0.94	58PH*070–16
CSPH*3012A**	1.00	0.96	58PH*070–16
CSPH*3612A**	1.02	0.94	58PH*070–16
CAP**3621A**	1.02	0.94	58PH*090–16
CNPH*3017A**	1.00	0.96	58PH*090–16
CNPH*3617A**	1.02	0.94	58PH*090–16
CNPV*3621A**	1.02	0.94	58PH*090–16
CSPH*3012A**	1.00	0.96	58PH*090–16
CSPH*3612A**	1.02	0.94	58PH*090–16

See notes on pg. 34

DETAILED COOLING CAPACITIES* (CONT.)

EVAPORATOR AIR		CONDENSER ENTERING AIR TEMPERATURES °F (°C)																	
		75 (23.9)			85 (29.4)			95 (35)			105 (40.6)			115 (46.1)			125 (51.7)		
CFM	EWB °F (°C)	Capacity MBtuh†		Total System KW**	Capacity MBtuh†		Total System KW**	Capacity MBtuh†		Total System KW**	Capacity MBtuh†		Total System KW**	Capacity MBtuh†		Total System KW**	Capacity MBtuh†		Total System KW**
		Total	Sens‡		Total	Sens‡		Total	Sens‡		Total	Sens‡		Total	Sens‡		Total	Sens‡	
38HDR036 Outdoor Section With CNPV*4221A** Indoor Section																			
1050	72 (22.2)	39.85	18.85	2.42	38.03	18.23	2.68	36.08	17.58	2.98	33.99	16.89	3.30	31.72	16.14	3.65	29.20	15.33	4.03
	67(19.4)	36.33	23.19	2.42	34.67	22.57	2.68	32.91	21.91	2.98	31.02	21.23	3.30	28.99	20.49	3.65	26.73	19.69	4.04
	62 (16.7)	33.23	27.51	2.42	31.75	26.88	2.68	30.20	26.20	2.98	28.60	28.45	3.30	27.06	27.06	3.65	25.34	25.34	4.03
	57 (13.9)	32.46	32.46	2.42	31.26	31.26	2.68	29.98	29.98	2.98	28.59	28.59	3.30	27.06	27.06	3.65	25.34	25.34	4.03
1200	72(22.2)	40.51	19.77	2.48	38.61	19.14	2.74	36.57	18.47	3.04	34.40	17.77	3.36	32.04	17.01	3.71	29.42	16.18	4.09
	67(19.4)	36.97	24.67	2.48	35.23	24.04	2.74	33.40	23.38	3.04	31.45	22.68	3.36	29.33	21.93	3.71	27.00	21.10	4.09
	62 (16.7)	34.01	29.52	2.48	32.53	32.23	2.74	31.11	31.11	3.04	29.61	29.61	3.36	27.97	27.97	3.71	26.12	26.12	4.09
	57 (13.9)	33.78	33.78	2.48	32.49	32.49	2.74	31.11	31.11	3.04	29.62	29.62	3.36	27.97	27.97	3.71	26.12	26.12	4.09
1350	72 (22.2)	40.99	20.64	2.54	39.02	19.99	2.80	36.91	19.31	3.09	34.67	18.60	3.42	32.24	17.83	3.77	29.54	16.99	4.15
	67 (19.4)	37.43	26.09	2.54	35.65	25.45	2.80	33.76	24.78	3.10	31.75	24.06	3.42	29.58	23.29	3.77	27.20	22.42	4.15
	62 (16.7)	34.86	34.86	2.54	33.49	33.49	2.80	32.02	32.02	3.10	30.44	30.44	3.42	28.70	28.70	3.77	26.73	26.73	4.15
	57(13.9)	34.86	34.86	2.54	33.49	33.49	2.80	32.03	32.03	3.10	30.44	30.44	3.42	28.70	28.70	3.77	26.73	26.73	4.15

COOLING INDOOR MODEL	CAPACITY	POWER	FURNACE MODEL
*CNPV*4221A**	1.00	1.00	
40QAC(Q)036–3	0.96	0.92	
CAP**3614A**	0.98	0.98	
CAP**3617A**	0.99	0.99	
CAP**3621A**	0.99	0.99	
CAP**4221A**	1.00	1.00	
CAP**4224A**	1.00	1.00	
CNPF*3618A**	0.99	0.99	
CNPH*3617A**	0.99	0.99	
CNPH*4221A**	1.00	1.00	
CNPV*3617A**	0.99	0.99	
CNPV*3621A**	0.99	0.99	
CNPV*4217A**	0.99	0.99	
CSPH*3612A**	0.99	0.99	
CSPH*4212A**	1.00	1.00	
FE4AN(B,F)003	0.99	0.95	
FE4AN(B,F)005	1.00	0.88	
FE4ANB006	1.00	0.88	
FE4ANF002	0.99	0.95	
FE5ANB004	1.04	0.91	
FF1ENP036	0.99	0.99	
FV4BN(B,F)003	0.99	0.91	
FV4BN(B,F)005	1.02	0.93	
FV4BNB006	1.00	0.88	
FV4BNF002	0.99	0.95	
FX4CN(B,F)036	0.99	0.95	
FX4CN(B,F)042	1.00	0.96	
FY4ANF036	0.99	0.99	
FY4ANF042	1.00	1.00	
CAP**3614A**	0.98	0.93	58CV(A,X)070–12
CNPH*3617A**	0.99	0.95	58CV(A,X)070–12
CNPH*4221A**	1.00	0.96	58CV(A,X)070–12
CSPH*3612A**	0.99	0.95	58CV(A,X)070–12
CSPH*4212A**	1.00	0.96	58CV(A,X)070–12
CAP**3617A**	0.99	0.95	58CV(A,X)090–16
CNPH*3617A**	0.99	0.95	58CV(A,X)090–16
CNPH*4221A**	1.00	0.96	58CV(A,X)090–16
CNPV*3617A**	0.99	0.95	58CV(A,X)090–16
CNPV*4217A**	1.00	0.92	58CV(A,X)090–16
CSPH*3612A**	0.99	0.95	58CV(A,X)090–16
CSPH*4212A**	1.00	0.96	58CV(A,X)090–16
CAP**3621A**	0.99	0.95	58CV(A,X)110–20

COOLING INDOOR MODEL	CAPACITY	POWER	FURNACE MODEL
CAP**4221A**	1.00	0.96	58CV(A,X)110–20
CNPH*3617A**	0.99	0.95	58CV(A,X)110–20
CNPH*4221A**	1.00	0.96	58CV(A,X)110–20
CNPV*3621A**	0.99	0.95	58CV(A,X)110–20
CNPV*4221A**	1.00	0.96	58CV(A,X)110–20
CSPH*3612A**	0.99	0.95	58CV(A,X)110–20
CSPH*4212A**	1.00	0.96	58CV(A,X)110–20
CAP**4224A**	1.00	0.96	58CV(A,X)135–22
CNPH*3617A**	0.99	0.95	58CV(A,X)135–22
CNPH*4221A**	1.00	0.96	58CV(A,X)135–22
CSPH*3612A**	0.99	0.95	58CV(A,X)135–22
CSPH*4212A**	1.00	0.96	58CV(A,X)135–22
CAP**4224A**	1.00	0.96	58CV(A,X)155–22
CNPH*3617A**	0.99	0.95	58CV(A,X)155–22
CNPH*4221A**	1.00	0.96	58CV(A,X)155–22
CSPH*3612A**	0.99	0.95	58CV(A,X)155–22
CSPH*4212A**	1.00	0.96	58CV(A,X)155–22
CAP**3617A**	0.99	0.91	58MEB040–12
CNPH*3617A**	0.99	0.91	58MEB040–12
CNPH*4221A**	1.00	0.92	58MEB040–12
CNPV*3617A**	0.10	0.09	58MEB040–12
CNPV*4217A**	1.00	0.92	58MEB040–12
CSPH*3612A**	0.99	0.91	58MEB040–12
CSPH*4212A**	1.00	0.92	58MEB040–12
CAP**3617A**	0.99	0.91	58MEB060–12
CNPH*3617A**	0.99	0.91	58MEB060–12
CNPH*4221A**	1.02	0.93	58MEB060–12
CNPV*3617A**	0.99	0.91	58MEB060–12
CNPV*4217A**	1.00	0.92	58MEB060–12
CSPH*3612A**	0.99	0.91	58MEB060–12
CSPH*4212A**	1.00	0.92	58MEB060–12
CAP**3617A**	0.99	0.91	58MEB080–12
CNPH*3617A**	0.99	0.91	58MEB080–12
CNPH*4221A**	1.00	0.92	58MEB080–12
CNPV*3617A**	0.99	0.91	58MEB080–12
CNPV*4217A**	1.00	0.92	58MEB080–12
CSPH*3612A**	0.99	0.91	58MEB080–12
CSPH*4212A**	1.00	0.92	58MEB080–12
CAP**3617A**	0.99	0.91	58MEB080–16
CNPH*3617A**	0.99	0.91	58MEB080–16
CNPH*4221A**	1.00	0.92	58MEB080–16
CNPV*3617A**	0.99	0.91	58MEB080–16

COOLING INDOOR MODEL	CAPACITY	POWER	FURNACE MODEL
CNPV*4217A**	1.00	0.92	58MEB080–16
CSPH*3612A**	0.99	0.91	58MEB080–16
CSPH*4212A**	1.00	0.92	58MEB080–16
CAP**3621A**	0.99	0.91	58MEB100–20
CAP**4221A**	1.00	0.92	58MEB100–20
CNPH*3617A**	0.99	0.91	58MEB100–20
CNPH*4221A**	1.00	0.92	58MEB100–20
CNPV*3621A**	0.99	0.91	58MEB100–20
CNPV*4221A**	1.00	0.92	58MEB100–20
CSPH*3612A**	0.99	0.91	58MEB100–20
CSPH*4212A**	1.00	0.92	58MEB100–20
CAP**3617A**	0.99	0.95	58MV(B,C)060–14
CNPH*3617A**	0.99	0.95	58MV(B,C)060–14
CNPH*4221A**	1.00	0.96	58MV(B,C)060–14
CNPV*3617A**	0.99	0.95	58MV(B,C)060–14
CNPV*4217A**	1.00	0.92	58MV(B,C)060–14
CSPH*3612A**	0.99	0.95	58MV(B,C)060–14
CSPH*4212A**	1.00	0.96	58MV(B,C)060–14
CAP**3621A**	0.99	0.95	58MV(B,C)080–14
CAP**4221A**	1.00	0.96	58MV(B,C)080–14
CNPH*3617A**	0.99	0.95	58MV(B,C)080–14
CNPH*4221A**	1.00	0.96	58MV(B,C)080–14
CNPV*3621A**	0.99	0.95	58MV(B,C)080–14
CNPV*4221A**	1.00	0.96	58MV(B,C)080–14
CSPH*3612A**	0.99	0.95	58MV(B,C)080–14
CSPH*4212A**	1.00	0.96	58MV(B,C)080–14
CAP**3621A**	0.99	0.95	58MV(B,C)080–20
CAP**4221A**	1.00	0.96	58MV(B,C)080–20
CNPH*3617A**	0.99	0.95	58MV(B,C)080–20
CNPH*4221A**	1.00	0.96	58MV(B,C)080–20
CNPV*3621A**	0.99	0.95	58MV(B,C)080–20
CNPV*4221A**	1.00	0.96	58MV(B,C)080–20
CSPH*3612A**	0.99	0.95	58MV(B,C)080–20
CSPH*4212A**	1.00	0.96	58MV(B,C)080–20
CAP**3621A**	0.99	0.95	58MV(B,C)100–20
CAP**4221A**	1.00	0.96	58MV(B,C)100–20
CNPH*3617A**	0.99	0.95	58MV(B,C)100–20
CNPH*4221A**	1.00	0.96	58MV(B,C)100–20
CNPV*3621A**	0.99	0.95	58MV(B,C)100–20
CNPV*4221A**	1.00	0.96	58MV(B,C)100–20
CSPH*3612A**	0.99	0.95	58MV(B,C)100–20
CSPH*4212A**	1.00	0.96	58MV(B,C)100–20

DETAILED COOLING CAPACITIES* (CONT.)

38HDR036 Outdoor Section With CNPV*4221A Indoor Section**

COOLING INDOOR MODEL	CAPACITY	POWER	FURNACE MODEL
CAP**4224A**	1.00	0.96	58MV(B,C)120–20
CNPH*3617A**	0.99	0.95	58MV(B,C)120–20
CNPH*4221A**	1.00	0.96	58MV(B,C)120–20
CSPH*3612A**	0.99	0.95	58MV(B,C)120–20
CSPH*4212A**	1.00	0.96	58MV(B,C)120–20
CAP**4224A**	1.00	0.96	58MVB040–14
CNPH*3617A**	0.99	0.95	58MVB040–14
CNPH*4221A**	1.00	0.96	58MVB040–14
CSPH*3612A**	0.99	0.95	58MVB040–14
CSPH*4212A**	1.00	0.96	58MVB040–14
CAP**3614A**	0.99	0.95	58PH*045–08
CNPH*3617A**	0.99	0.95	58PH*045–08
CNPH*4221A**	1.00	0.96	58PH*045–08
CSPH*3612A**	0.99	0.95	58PH*045–08
CSPH*4212A**	1.00	0.96	58PH*045–08
CAP**3617A**	0.99	0.95	58PH*070–16
CNPH*3617A**	0.99	0.95	58PH*070–16
CNPH*4221A**	1.00	0.96	58PH*070–16
CNPV*3617A**	0.99	0.95	58PH*070–16
CNPV*4217A**	1.00	0.92	58PH*070–16
CSPH*3612A**	0.99	0.95	58PH*070–16
CSPH*4212A**	1.00	0.96	58PH*070–16
CAP**3621A**	0.99	0.91	58PH*090–16
CAP**4221A**	1.00	0.92	58PH*090–16
CNPH*3617A**	0.99	0.91	58PH*090–16
CNPH*4221A**	1.00	0.92	58PH*090–16
CNPV*3621A**	0.99	0.91	58PH*090–16
CNPV*4221A**	1.00	0.92	58PH*090–16
CSPH*3612A**	0.99	0.91	58PH*090–16
CSPH*4212A**	1.00	0.92	58PH*090–16
CAP**3621A**	0.99	0.91	58PH*110–20
CAP**4221A**	1.02	0.93	58PH*110–20
CNPH*3617A**	0.99	0.91	58PH*110–20
CNPH*4221A**	1.02	0.93	58PH*110–20
CNPV*3621A**	0.99	0.91	58PH*110–20
CNPV*4221A**	1.00	0.92	58PH*110–20
CSPH*3612A**	0.99	0.91	58PH*110–20
CSPH*4212A**	1.00	0.92	58PH*110–20

See notes on pg. 34

DETAILED COOLING CAPACITIES* (CONT.)

EVAPORATOR AIR		CONDENSER ENTERING AIR TEMPERATURES °F (°C)																	
		75 (23.9)			85 (29.4)			95 (35)			105 (40.6)			115 (46.1)			125 (51.7)		
CFM	EWB °F (°C)	Capacity MBtuh†		Total System KW**	Capacity MBtuh†		Total System KW**	Capacity MBtuh†		Total System KW**	Capacity MBtuh†		Total System KW**	Capacity MBtuh†		Total System KW**	Capacity MBtuh†		Total System KW**
		Total	Sens‡		Total	Sens‡		Total	Sens‡		Total	Sens‡		Total	Sens‡		Total	Sens‡	
38HDR048 Outdoor Section With CNPV*4821A** Indoor Section																			
1460	72 (22.2)	57.22	27.09	3.31	54.16	26.03	3.74	50.83	24.90	4.20	47.23	23.69	4.69	43.24	22.38	5.21	38.87	20.99	5.76
	67(19.4)	52.21	33.21	3.33	49.49	32.17	3.76	46.57	31.08	4.22	43.40	29.91	4.71	39.95	28.66	5.23	36.03	27.26	5.77
	62 (16.7)	47.74	39.31	3.35	45.37	38.29	3.78	42.88	37.19	4.23	40.25	39.91	4.72	37.64	37.64	5.23	34.63	34.63	5.78
	57 (13.9)	46.44	46.44	3.36	44.53	44.53	3.78	42.48	42.48	4.23	40.21	40.21	4.72	37.65	37.65	5.23	34.63	34.63	5.78
1650	72(22.2)	58.13	28.26	3.37	54.91	27.17	3.81	51.42	26.01	4.27	47.67	24.78	4.76	43.52	23.45	5.28	39.26	22.10	5.84
	67(19.4)	53.07	35.09	3.40	50.21	34.03	3.83	47.16	32.91	4.29	43.87	31.73	4.78	40.28	30.44	5.30	36.23	28.99	5.85
	62 (16.7)	48.75	41.89	3.42	46.32	40.79	3.85	43.85	43.85	4.30	41.42	41.42	4.79	38.64	38.64	5.31	35.37	35.37	5.85
	57 (13.9)	48.17	48.17	3.43	46.11	46.11	3.85	43.88	43.88	4.30	41.42	41.42	4.79	38.64	38.64	5.31	35.37	35.37	5.85
1850	72 (22.2)	58.83	29.41	3.45	55.48	28.31	3.88	51.86	27.12	4.35	47.97	25.87	4.84	43.73	24.52	5.36	39.89	23.26	5.92
	67 (19.4)	53.74	36.97	3.48	50.78	35.90	3.91	47.62	34.76	4.37	44.22	33.55	4.86	40.51	32.22	5.38	36.39	30.70	5.93
	62 (16.7)	49.74	44.35	3.50	47.48	47.48	3.92	45.09	45.09	4.38	42.44	42.44	4.87	39.46	39.46	5.38	35.96	35.96	5.93
	57(13.9)	49.69	49.69	3.50	47.49	47.49	3.92	45.09	45.09	4.38	42.45	42.45	4.87	39.46	39.46	5.38	35.97	35.97	5.93

COOLING INDOOR MODEL	CAPACITY	POWER	FURNACE MODEL
*CNPV*4821A**	1.00	1.00	
40QAC048–3	0.97	0.93	
CAP**4817A**	0.99	0.99	
CAP**4821A**	1.00	1.00	
CAP**4824A**	1.00	1.00	
CAP**6021A**	1.01	1.01	
CAP**6024A**	1.01	1.01	
CNPF*4818A**	0.98	0.98	
CNPH*4821A**	1.00	1.00	
CNPH*6024A**	1.01	1.01	
CNPV*4824A**	1.00	1.00	
CNPV*6024A**	1.01	1.01	
CSPH*4812A**	1.00	1.00	
CSPH*6012A**	1.01	1.01	
FE4AN(B,F)005	1.00	0.96	
FE4ANB006	1.01	0.97	
FV4BN(B,F)005	1.00	0.96	
FV4BNB006	1.01	0.97	
FX4CN(B,F)048	1.00	0.96	
FX4CN(B,F)060	1.01	0.97	
FY4ANB060	1.01	1.01	
FY4ANF048	1.00	1.00	
CAP**4817A**	0.99	0.95	58CV(A,X)090–16
CNPH*4821A**	0.99	0.95	58CV(A,X)090–16
CNPH*6024A**	1.00	0.96	58CV(A,X)090–16
CSPH*4812A**	0.99	0.95	58CV(A,X)090–16
CSPH*6012A**	1.00	0.96	58CV(A,X)090–16
CAP**4821A**	0.99	0.95	58CV(A,X)110–20
CAP**6021A**	1.00	0.96	58CV(A,X)110–20
CNPH*4821A**	0.99	0.95	58CV(A,X)110–20
CNPH*6024A**	1.00	0.96	58CV(A,X)110–20
CNPV*4821A**	0.99	0.95	58CV(A,X)110–20
CSPH*4812A**	0.99	0.95	58CV(A,X)110–20
CSPH*6012A**	1.00	0.96	58CV(A,X)110–20
CAP**4824A**	0.99	0.95	58CV(A,X)135–22
CAP**6024A**	1.00	0.96	58CV(A,X)135–22
CNPH*4821A**	0.99	0.95	58CV(A,X)135–22
CNPH*6024A**	1.00	0.96	58CV(A,X)135–22
CNPV*4824A**	0.99	0.95	58CV(A,X)135–22
CNPV*6024A**	1.00	0.96	58CV(A,X)135–22
CSPH*4812A**	0.99	0.95	58CV(A,X)135–22
CSPH*6012A**	1.00	0.96	58CV(A,X)135–22

COOLING INDOOR MODEL	CAPACITY	POWER	FURNACE MODEL
CAP**4824A**	0.99	0.95	58CV(A,X)155–22
CAP**6024A**	1.00	0.96	58CV(A,X)155–22
CNPH*4821A**	0.99	0.95	58CV(A,X)155–22
CNPH*6024A**	1.00	0.96	58CV(A,X)155–22
CNPV*4824A**	0.99	0.95	58CV(A,X)155–22
CNPV*6024A**	1.00	0.96	58CV(A,X)155–22
CSPH*4812A**	0.99	0.95	58CV(A,X)155–22
CSPH*6012A**	1.00	0.96	58CV(A,X)155–22
CAP**4817A**	0.99	0.95	58MEB080–16
CNPH*4821A**	0.99	0.95	58MEB080–16
CNPH*6024A**	1.00	0.96	58MEB080–16
CSPH*4812A**	0.99	0.95	58MEB080–16
CSPH*6012A**	1.00	0.92	58MEB080–16
CAP**4821A**	0.99	0.95	58MEB100–20
CAP**6021A**	1.00	0.92	58MEB100–20
CNPH*4821A**	0.99	0.95	58MEB100–20
CNPH*6024A**	1.00	0.92	58MEB100–20
CNPV*4821A**	0.99	0.95	58MEB100–20
CSPH*4812A**	0.99	0.95	58MEB100–20
CSPH*6012A**	1.00	0.92	58MEB100–20
CAP**4824A**	0.99	0.95	58MEB120–20
CAP**6024A**	1.00	0.92	58MEB120–20
CNPH*4821A**	0.99	0.95	58MEB120–20
CNPH*6024A**	1.00	0.92	58MEB120–20
CNPV*4824A**	0.99	0.95	58MEB120–20
CNPV*6024A**	1.00	0.92	58MEB120–20
CSPH*4812A**	0.99	0.95	58MEB120–20
CSPH*6012A**	1.00	0.92	58MEB120–20
CAP**4821A**	0.98	0.94	58MV(B,C)080–20
CAP**6021A**	1.00	0.96	58MV(B,C)080–20
CNPH*4821A**	0.99	0.95	58MV(B,C)080–20
CNPH*6024A**	1.00	0.96	58MV(B,C)080–20
CNPV*4821A**	0.99	0.95	58MV(B,C)080–20
CSPH*4812A**	0.99	0.95	58MV(B,C)080–20
CSPH*6012A**	1.00	0.96	58MV(B,C)080–20
CAP**4821A**	0.99	0.95	58MV(B,C)100–20
CAP**6021A**	1.00	0.96	58MV(B,C)100–20
CNPH*4821A**	0.99	0.95	58MV(B,C)100–20
CNPH*6024A**	1.00	0.96	58MV(B,C)100–20
CNPV*4821A**	0.99	0.95	58MV(B,C)100–20
CSPH*4812A**	0.99	0.95	58MV(B,C)100–20
CSPH*6012A**	1.00	0.96	58MV(B,C)100–20

COOLING INDOOR MODEL	CAPACITY	POWER	FURNACE MODEL
CAP**4824A**	0.99	0.95	58MV(B,C)120–20
CAP**6024A**	1.00	0.96	58MV(B,C)120–20
CNPH*4821A**	0.99	0.95	58MV(B,C)120–20
CNPH*6024A**	1.00	0.96	58MV(B,C)120–20
CNPV*4824A**	0.99	0.95	58MV(B,C)120–20
CNPV*6024A**	1.00	0.96	58MV(B,C)120–20
CSPH*4812A**	0.99	0.95	58MV(B,C)120–20
CSPH*6012A**	1.00	0.96	58MV(B,C)120–20
CAP**4817A**	0.99	0.95	58PH*070–16
CAP**4821A**	0.99	0.95	58PH*090–16
CAP**6021A**	1.00	0.92	58PH*090–16
CNPH*4821A**	0.99	0.95	58PH*090–16
CNPH*6024A**	1.00	0.92	58PH*090–16
CNPV*4821A**	0.99	0.95	58PH*090–16
CSPH*4812A**	0.99	0.95	58PH*090–16
CSPH*6012A**	1.00	0.92	58PH*090–16
CAP**4821A**	0.99	0.95	58PH*110–20
CAP**6021A**	1.00	0.92	58PH*110–20
CNPH*4821A**	0.99	0.95	58PH*110–20
CNPH*6024A**	1.00	0.92	58PH*110–20
CNPV*4821A**	0.99	0.95	58PH*110–20
CSPH*4812A**	0.99	0.95	58PH*110–20
CSPH*6012A**	1.00	0.92	58PH*110–20
CAP**4824A**	0.99	0.95	58PH*135–20
CAP**6024A**	1.00	0.92	58PH*135–20
CNPH*4821A**	0.99	0.95	58PH*135–20
CNPH*6024A**	1.00	0.92	58PH*135–20
CNPV*4824A**	0.99	0.95	58PH*135–20
CNPV*6024A**	1.00	0.92	58PH*135–20
CSPH*4812A**	0.99	0.95	58PH*135–20
CSPH*6012A**	1.00	0.92	58PH*135–20

See notes on pg. 34

DETAILED COOLING CAPACITIES** (CONT.)

EVAPORATOR AIR		CONDENSER ENTERING AIR TEMPERATURES °F (°C)																	
		75 (23.9)			85 (29.4)			95 (35)			105 (40.6)			115 (46.1)			125 (51.7)		
CFM	EWB °F (°C)	Capacity MBtuh†		Total System KW**	Capacity MBtuh†		Total System KW**	Capacity MBtuh†		Total System KW**	Capacity MBtuh†		Total System KW**	Capacity MBtuh†		Total System KW**	Capacity MBtuh†		Total System KW**
		Total	Sens‡		Total	Sens‡		Total	Sens‡		Total	Sens‡		Total	Sens‡		Total	Sens‡	
38HDR060 Outdoor Section With CNPV*6024A** Indoor Section																			
1750	72 (22.2)	68.88	33.36	4.20	65.13	32.05	4.64	60.97	30.62	5.12	56.47	29.10	5.64	51.66	27.52	6.20	46.31	25.80	6.80
	67(19.4)	63.28	41.18	4.15	59.98	39.91	4.59	56.34	38.52	5.08	52.38	37.05	5.60	48.00	35.44	6.17	43.23	33.69	6.77
	62 (16.7)	58.24	48.95	4.11	55.37	47.69	4.55	52.27	46.30	5.04	48.91	48.85	5.57	45.63	45.63	6.15	41.69	41.69	6.76
	57 (13.9)	56.77	56.77	4.09	54.45	54.45	4.54	51.86	51.86	5.03	48.95	48.95	5.57	45.63	45.63	6.15	41.69	41.69	6.76
2000	72(22.2)	69.89	34.93	4.31	65.94	33.59	4.75	61.58	32.12	5.23	56.96	30.59	5.74	52.01	29.02	6.31	47.30	27.45	6.92
	67(19.4)	64.28	43.75	4.26	60.81	42.45	4.70	57.00	41.04	5.18	52.88	39.53	5.71	48.32	37.86	6.27	43.82	36.17	6.88
	62 (16.7)	59.48	52.47	4.22	56.55	51.08	4.66	53.58	53.58	5.15	50.40	50.40	5.68	46.78	46.78	6.26	42.62	42.62	6.87
	57 (13.9)	58.96	58.96	4.21	56.42	56.42	4.66	53.58	53.58	5.15	50.40	50.40	5.68	46.78	46.78	6.26	42.60	42.60	6.87
2250	72 (22.2)	70.60	36.41	4.42	66.50	35.04	4.86	61.97	33.55	5.33	57.25	32.02	5.85	52.14	30.44	6.41	48.41	29.01	7.04
	67 (19.4)	65.01	46.21	4.37	61.41	44.89	4.81	57.46	43.44	5.29	53.20	41.88	5.81	48.56	40.17	6.37	44.28	38.42	6.99
	62 (16.7)	60.67	60.67	4.33	58.00	58.00	4.78	54.94	54.94	5.26	51.52	51.52	5.79	47.63	47.63	6.36	43.18	43.18	6.98
	57(13.9)	60.73	60.73	4.33	58.00	58.00	4.78	54.94	54.94	5.26	51.52	51.52	5.79	47.63	47.63	6.36	43.14	43.14	6.98

COOLING INDOOR MODEL	CAPACITY	POWER	FURNACE MODEL
*CNPV*6024A**	1.00	1.00	
40QAC060–3	0.98	0.98	
CAP**6021A**	1.00	1.00	
CAP**6024A**	1.00	1.00	
CNPH*6024A**	1.00	1.00	
CSPH*6012A**	1.00	1.00	
FE4ANB006	1.01	1.01	
FV4BNB006	1.01	1.01	
FX4CN(B,F)060	1.01	1.01	
FY4ANB060	1.00	1.00	
CAP**6021A**	0.98	0.98	58CV(A,X)110–20
CNPH*6024A**	0.98	0.98	58CV(A,X)110–20
CSPH*6012A**	0.98	0.98	58CV(A,X)110–20
CAP**6024A**	0.98	0.98	58CV(A,X)135–22

COOLING INDOOR MODEL	CAPACITY	POWER	FURNACE MODEL
CNPH*6024A**	0.98	0.98	58CV(A,X)135–22
CNPV*6024A**	0.98	0.98	58CV(A,X)135–22
CSPH*6012A**	0.98	0.98	58CV(A,X)135–22
CAP**6024A**	0.98	0.98	58CV(A,X)155–22
CNPH*6024A**	0.98	0.98	58CV(A,X)155–22
CNPV*6024A**	0.98	0.98	58CV(A,X)155–22
CSPH*6012A**	0.98	0.98	58CV(A,X)155–22
CNPH*6024A**	0.98	0.98	58MEB080–16
CSPH*6012A**	0.98	0.98	58MEB080–16
CAP**6021A**	0.98	0.98	58MEB100–20
CNPH*6024A**	0.98	0.98	58MEB100–20
CSPH*6012A**	0.98	0.98	58MEB100–20
CAP**6024A**	0.98	0.98	58MEB120–20
CNPH*6024A**	0.98	0.98	58MEB120–20

COOLING INDOOR MODEL	CAPACITY	POWER	FURNACE MODEL
CNPV*6024A**	0.98	0.98	58MEB120–20
CSPH*6012A**	0.98	0.98	58MEB120–20
CSPH*6012A**	0.98	0.98	58MV(B,C)120–20
CAP**6021A**	0.98	0.98	58PH*090–16
CNPH*6024A**	0.98	0.98	58PH*090–16
CSPH*6012A**	0.98	0.98	58PH*090–16
CAP**6021A**	0.98	0.98	58PH*110–20
CNPH*6024A**	0.98	0.98	58PH*110–20
CSPH*6012A**	0.98	0.98	58PH*110–20
CAP**6024A**	0.98	0.98	58PH*135–20
CNPH*6024A**	0.98	0.98	58PH*135–20
CNPV*6024A**	0.98	0.98	58PH*135–20
CSPH*6012A**	0.98	0.98	58PH*135–20

NOTE: When the required data fall between the published data, interpolation may be performed. Extrapolation is not an acceptable practice.

* Detailed cooling capacities are based on indoor and outdoor unit at the same elevation per the latest edition of AHRI standard 210/240. If additional tubing length and/or indoor unit is located above outdoor unit, a slight variation in capacity may occur.

† Total and sensible capacities are net capacities. Blower motor heat has been subtracted.

‡ Sensible capacities shown are based on 80°F (27°C) entering air at the indoor coil. For sensible capacities at other than 80°F (27°C), deduct 835 Btuh (245 kW) per 1000 CFM (480 L/S) of indoor coil air for each degree below 80°F (27°C), or add 835 Btuh (245 kW) per 1000 CFM (480 L/S) of indoor coil air per degree above 80°F (27°C).
When the required data fall between the published data, interpolation may be performed.

** Total system kW is total of indoor and outdoor unit kilowatts.

CONDENSER ONLY RATINGS*

SST °F (°C)		CONDENSER ENTERING AIR TEMPERATURES °F (°C)							
		55 (12.8)	65 (18.3)	75 (23.9)	85 (29.4)	95 (35)	105 (40.6)	115 (46.1)	125 (51.7)
38HDR018–31									
30 (–1.6)	TCG	16.20	15.30	14.30	13.40	12.40	11.40	10.30	9.20
	SDT	67.40	77.00	86.50	96.00	105.50	114.90	124.40	133.70
	KW	0.86	0.98	1.11	1.26	1.42	1.59	1.77	1.96
35 (1.7)	TCG	17.90	16.90	15.90	14.80	13.80	12.70	11.60	10.40
	SDT	68.50	78.00	87.50	97.00	106.40	115.80	125.20	134.50
	KW	0.86	0.98	1.11	1.26	1.42	1.59	1.78	1.98
40 (4.4)	TCG	19.70	18.60	17.50	16.40	15.20	14.10	12.90	11.60
	SDT	69.70	79.10	88.60	98.00	107.40	116.80	126.10	135.30
	KW	0.85	0.97	1.11	1.26	1.42	1.60	1.79	1.99
45 (7.2)	TCG	21.60	20.40	19.20	18.00	16.80	15.50	14.20	12.80
	SDT	70.90	80.30	89.70	99.00	108.40	117.70	127.00	136.10
	KW	0.85	0.97	1.11	1.26	1.42	1.60	1.79	2.00
50 (10)	TCG	23.60	22.30	21.10	19.70	18.40	17.00	15.60	14.10
	SDT	72.20	81.50	90.80	100.10	109.40	118.60	127.80	136.90
	KW	0.85	0.97	1.11	1.26	1.42	1.60	1.79	2.00
55 (12.8)	TCG	25.70	24.30	22.90	21.50	20.00	18.60	17.00	15.40
	SDT	73.50	82.70	92.00	101.20	110.40	119.60	128.70	137.70
	KW	0.85	0.97	1.10	1.25	1.42	1.60	1.79	2.00
38HDR024–32									
30 (–1.6)	TCG	22.10	20.90	19.60	18.30	16.90	15.50	14.00	12.40
	SDT	69.00	78.50	88.00	97.40	106.80	116.10	125.30	134.50
	KW	1.08	1.24	1.41	1.60	1.80	2.02	2.25	2.48
35 (1.7)	TCG	24.30	23.00	21.70	20.30	18.80	17.20	15.60	13.80
	SDT	70.30	79.80	89.20	98.60	107.90	117.10	126.30	135.40
	KW	1.09	1.24	1.42	1.61	1.82	2.04	2.28	2.52
40 (4.4)	TCG	26.80	25.30	23.90	22.30	20.70	19.00	17.20	15.30
	SDT	71.70	81.10	90.50	99.80	109.10	118.20	127.30	136.30
	KW	1.10	1.26	1.43	1.62	1.83	2.06	2.30	2.55
45 (7.2)	TCG	29.40	27.80	26.20	24.50	22.70	20.90	18.90	16.70
	SDT	73.20	82.60	91.90	101.10	110.20	119.30	128.30	137.10
	KW	1.11	1.27	1.44	1.64	1.85	2.08	2.32	2.57
50 (10)	TCG	32.10	30.40	28.60	26.80	24.80	22.70	20.50	18.10
	SDT	74.80	84.10	93.30	102.40	111.50	120.40	129.20	137.90
	KW	1.12	1.28	1.46	1.65	1.86	2.09	2.33	2.59
55 (12.8)	TCG	35.00	33.10	31.20	29.10	26.90	24.60	22.20	19.50
	SDT	76.40	85.60	94.70	103.80	112.70	121.50	130.20	138.60
	KW	1.13	1.29	1.47	1.66	1.88	2.10	2.35	2.60
38HDR030–31									
30 (–1.6)	TCG	26.20	24.70	23.20	21.70	20.10	18.40	16.80	15.30
	SDT	72.00	82.30	92.90	103.80	115.00	126.90	139.00	148.90
	KW	1.30	1.48	1.69	1.92	2.19	2.50	2.84	3.12
35 (1.7)	TCG	28.80	27.30	25.70	24.10	22.40	20.60	18.90	17.40
	SDT	73.10	83.50	94.00	104.80	116.10	127.70	139.50	149.30
	KW	1.30	1.49	1.69	1.93	2.21	2.52	2.86	3.15
40 (4.4)	TCG	31.70	30.10	28.40	26.60	24.80	23.00	21.20	19.60
	SDT	74.30	84.70	95.20	105.90	117.10	128.60	140.00	149.70
	KW	1.31	1.49	1.70	1.94	2.22	2.53	2.87	3.18
45 (7.2)	TCG	34.80	33.10	31.20	29.40	27.40	25.50	23.60	21.90
	SDT	75.60	85.90	96.40	107.10	118.10	129.40	140.60	150.10
	KW	1.31	1.50	1.71	1.95	2.22	2.54	2.88	3.19
50 (10)	TCG	38.20	36.20	34.30	32.30	30.30	28.20	26.20	24.40
	SDT	76.90	87.20	97.60	108.20	119.20	130.30	141.10	150.50
	KW	1.32	1.50	1.71	1.95	2.23	2.55	2.89	3.20
55 (12.8)	TCG	41.70	39.70	37.60	35.50	33.30	31.10	29.00	27.10
	SDT	78.30	88.50	98.90	109.40	120.20	131.20	141.80	150.90
	KW	1.32	1.51	1.72	1.96	2.24	2.55	2.89	3.20
38HDR036–31									
30 (–1.6)	TCG	30.10	28.50	26.80	25.10	23.30	21.50	19.60	17.60
	SDT	70.90	80.80	90.90	101.00	111.20	121.60	132.30	143.30
	KW	1.50	1.71	1.94	2.20	2.50	2.83	3.19	3.58
35 (1.7)	TCG	33.20	31.50	29.70	27.80	25.90	24.00	21.90	19.90
	SDT	72.00	82.00	92.00	102.10	112.30	122.80	133.30	143.80
	KW	1.50	1.71	1.95	2.21	2.52	2.85	3.21	3.60
40 (4.4)	TCG	36.50	34.60	32.70	30.70	28.70	26.60	24.40	22.30
	SDT	73.30	83.20	93.20	103.20	113.40	123.60	134.10	144.50
	KW	1.51	1.72	1.95	2.22	2.52	2.85	3.23	3.63
45 (7.2)	TCG	40.10	38.10	36.00	33.80	31.70	29.40	27.10	24.80
	SDT	74.60	84.40	94.40	104.50	113.80	124.50	135.20	145.30
	KW	1.51	1.72	1.96	2.23	2.51	2.86	3.26	3.65
50 (10)	TCG	43.90	41.70	39.50	37.10	34.90	32.40	30.00	27.60
	SDT	75.90	85.80	95.70	105.90	115.50	125.90	136.20	146.00
	KW	1.52	1.73	1.97	2.24	2.54	2.89	3.27	3.66
55 (12.8)	TCG	48.00	45.70	43.30	40.70	38.30	35.70	33.10	30.50
	SDT	77.40	87.10	97.00	107.10	116.70	126.80	137.00	146.70
	KW	1.53	1.74	1.98	2.25	2.55	2.89	3.28	3.66

See notes on page 38

CONDENSER ONLY RATINGS* CONTINUED

SST °F (°C)		CONDENSER ENTERING AIR TEMPERATURES °F (°C)							
		55 (12.8)	65 (18.3)	75 (23.9)	85 (29.4)	95 (35)	105 (40.6)	115 (46.1)	125 (51.7)
38HDR048–32									
30 (–1.6)	TCG	48.40	45.50	42.50	39.50	36.20	32.90	30.60	28.10
	SDT	67.90	77.30	86.70	96.00	105.40	114.70	124.30	133.80
	KW	2.05	2.39	2.75	3.15	3.56	4.01	4.49	5.00
35 (1.7)	TCG	53.40	50.20	46.90	43.40	39.60	35.70	34.00	25.50
	SDT	69.10	78.40	87.80	97.00	106.20	115.40	125.10	133.00
	KW	2.02	2.37	2.74	3.14	3.56	4.01	4.51	4.99
40 (4.4)	TCG	58.70	55.10	51.40	47.50	43.10	38.30	33.00	27.10
	SDT	70.40	79.60	88.90	98.00	107.10	116.10	124.80	133.40
	KW	1.99	2.35	2.72	3.13	3.55	4.01	4.49	4.99
45 (7.2)	TCG	64.30	60.30	56.20	51.60	46.90	41.20	35.20	28.90
	SDT	71.80	80.90	90.00	99.10	108.10	116.80	125.40	133.80
	KW	1.96	2.32	2.70	3.11	3.54	4.00	4.48	4.99
50 (10)	TCG	70.30	65.80	61.10	55.80	50.40	44.20	37.30	34.60
	SDT	73.30	82.30	91.20	100.10	108.90	117.50	125.90	135.30
	KW	1.92	2.29	2.68	3.09	3.52	3.98	4.46	5.01
55 (12.8)	TCG	76.50	71.40	66.00	60.30	54.00	47.00	50.70	41.10
	SDT	74.80	83.60	92.50	101.20	109.80	118.20	129.40	137.00
	KW	1.88	2.25	2.64	3.06	3.49	3.95	4.57	5.05
38HDR060–32									
30 (–1.6)	TCG	59.30	55.30	50.90	46.20	40.40	37.90	33.80	30.30
	SDT	70.10	79.30	88.40	97.40	106.20	115.80	124.90	134.20
	KW	2.59	2.93	3.31	3.73	4.19	4.72	5.31	5.90
35 (1.7)	TCG	64.70	60.20	55.50	50.00	43.30	42.40	31.50	33.10
	SDT	71.40	80.50	89.50	98.40	106.90	116.90	124.20	134.90
	KW	2.62	2.97	3.34	3.76	4.21	4.76	5.25	5.93
40 (4.4)	TCG	69.90	65.30	60.10	53.80	55.90	47.40	31.70	35.60
	SDT	72.70	81.70	90.60	99.30	110.10	118.10	124.20	135.50
	KW	2.66	3.00	3.38	3.78	4.34	4.81	5.24	5.96
45 (7.2)	TCG	76.00	70.80	64.80	57.40	56.00	54.60	48.50	47.70
	SDT	74.10	83.00	91.80	100.20	110.00	119.90	128.60	138.80
	KW	2.71	3.04	3.40	3.80	4.32	4.89	5.43	6.08
50 (10)	TCG	82.20	76.70	69.30	70.90	61.80	58.60	30.50	52.10
	SDT	75.60	84.40	92.80	103.40	111.40	120.90	123.80	139.80
	KW	2.75	3.09	3.42	3.99	4.38	4.93	5.16	6.13
55 (12.8)	TCG	95.20	87.70	88.40	74.60	75.40	53.90	46.10	60.30
	SDT	78.80	87.10	97.50	104.30	114.70	119.50	127.70	141.70
	KW	2.85	3.13	3.74	3.95	4.56	4.78	5.33	6.25

* AHRI listing applies only to systems shown in Combination Ratings table.

KW – Outdoor Unit Kilowatts Only.

SDT – Saturated Temperature Leaving Compressor (°F)

SST – Saturated Temperature Entering Compressor (°F/°C)

TCG – Gross Cooling Capacity (1000 Btuh)

GUIDE SPECIFICATIONS
GENERAL

System Description

Outdoor-mounted, air-cooled, split-system air conditioner unit suitable for ground or rooftop installation. Unit consists of a hermetic compressor, an air-cooled coil, propeller-type condenser fan, and a control box. Unit will discharge supply air horizontally as shown on contract drawings. Unit will be used in a refrigeration circuit to match up to a packaged fan coil or coil unit.

Quality Assurance

— Unit will be rated in accordance with the latest edition of ARI Standard 210.

— Unit will be certified for capacity and efficiency, and listed in the latest ARI directory.

— Unit construction will comply with latest edition of ANSI/ ASHRAE and with NEC.

— Unit will be constructed in accordance with UL standards and will carry the UL label of approval. Unit will have c-UL approval.

— Unit cabinet will be capable of withstanding Federal Test
Method Standard No. 141 (Method 6061) 500-hr salt spray test.

— Air-cooled condenser coils will be leak tested and pressure tested

— Unit constructed in ISO9001 approved facility.

Delivery, Storage, and Handling

— Unit will be shipped as single package only and is stored and handled per unit manufacturer's recommendations.

Warranty (for inclusion by specifying engineer)

— U.S. and Canada only.

PRODUCTS

Equipment

— Factory assembled, single piece, air-cooled air conditioner unit. Contained within the unit enclosure is all factory wiring, piping, controls, compressor, refrigerant charge Puron® (R-410A), and special features required prior to field start-up.

Unit Cabinet

— Unit cabinet will be constructed of galvanized steel, bonderized, and coated with a powder coat paint.

Fans

— Condenser fan will be direct-drive propeller type, discharging air horizontally.

— Condenser fan motors will be totally enclosed, 1-phase type with class B insulation and permanently lubricated bearings. Shafts will be corrosion resistant.

— Fan blades will be statically and dynamically balanced.

— Condenser fan openings will be equipped with coated steel wire safety guards.

Compressor

— Compressor will be hermetically sealed.

— Compressor will be mounted on rubber vibration isolators.

Condenser Coil

— Condenser coil will be air cooled.

— Coil will be constructed of aluminum fins mechanically bonded to copper tubes which are then cleaned, dehydrated, and sealed.

Refrigeration Components

— Refrigeration circuit components will include liquid-line front-seating shutoff valve with sweat connections, vapor-line front-seating shutoff valve with sweat connections, system charge of Puron® (R-410A) refrigerant, and compressor oil.

— Unit will be equipped with high-pressure switch, low pressure switch and filter drier for Puron refrigerant.

Operating Characteristics

— The capacity of the unit will meet or exceed _____ Btuh at a suction temperature of _____ °F/°C. The power consumption at full load will not exceed _____ kW.

— Combination of the unit and the evaporator or fan coil unit will have a total net cooling capacity of _____ Btuh or greater at conditions of _____ CFM entering air temperature at the evaporator at _____ °F/°C wet bulb and _____ °F/°C dry bulb, and air entering the unit at _____ °F/°C.

— The system will have a SEER of _____ Btuh/watt or greater at DOE conditions.

Electrical Requirements

— Nominal unit electrical characteristics will be _____ v, single phase, 60 hz. The unit will be capable of satisfactory operation within voltage limits of _____ v to _____ v.

— Nominal unit electrical characteristics will be _____ v, three phase, 60 hz. The unit will be capable of satisfactory operation within voltage limits of _____ v to _____ v.

— Unit electrical power will be single point connection.

— Control circuit will be 24v.

Special Features

— Refer to section of this literature identifying accessories and descriptions for specific features and available enhancements.

SYSTEM DESIGN SUMMARY

1. Intended for outdoor installation with free air inlet and outlet. Outdoor fan external static pressure available is less than 0.01-in. wc.
2. Minimum outdoor operating air temperature without low-ambient operation accessory is 55°F (12.8°C).
3. Maximum outdoor operating air temperature is 125°F (51.7°C).
4. For reliable operation, unit should be level in all horizontal planes.
5. For interconnecting refrigerant tube lengths greater than 80 ft (23.4 m) and/or 35 ft (10.7 m) vertical differential, consult Residential Piping and Longline Guideline and Service Manual available from equipment distributor.
6. If any refrigerant tubing is buried, provide a 6 in. (152.4 mm) vertical rise to the valve connections at the unit. Refrigerant tubing lengths up to 36 in. (914.4 mm) may be buried without further consideration. Do not bury refrigerant lines longer than 36 in. (914.4 mm).
7. Use only copper wire for electric connection at unit. Aluminum and clad aluminum are not acceptable for the type of connector provided.
8. Do not apply capillary tube indoor coils to these units.
9. Factory-supplied filter drier must be installed.

Printed in U.S.A. Edition Date: 06/09 **Catalog No: 38HDR-4PD**

Replaces: 38HDR-3PD

Appendix C

CalEEMod Worksheets and Health Risk Report

EMFAC Off-Model Adjustment Factors for Gasoline Light Duty Vehicle to Account for the SAFE Vehicle Rule Applied

540 San Pablo Avenue CE

Bay Area AQMD Air District, Annual

1.0 Project Characteristics

1.1 Land Usage

Land Uses	Size	Metric	Lot Acreage	Floor Surface Area	Population
Enclosed Parking with Elevator	137.00	Space	0.00	35,396.00	0
Parking Lot	25.00	Space	0.00	10,000.00	0
Apartments Mid Rise	198.00	Dwelling Unit	2.18	224,859.00	566
Condo/Townhouse	9.00	Dwelling Unit	0.00	16,326.00	26
Strip Mall	5.50	1000sqft	0.00	5,500.00	0

1.2 Other Project Characteristics

Urbanization	Urban	**Wind Speed (m/s)**	2.2	**Precipitation Freq (Days)**	64
Climate Zone	5			**Operational Year**	2025
Utility Company	Pacific Gas and Electric Company				
CO2 Intensity (lb/MWhr)	135.1	**CH4 Intensity (lb/MWhr)**	0.033	**N2O Intensity (lb/MWhr)**	0.004

1.3 User Entered Comments & Non-Default Data

Project Characteristics - Project is in City of Albany, under BAAQMD. Utility provider is East Bay Community Energy, used 2019 CO2 emission rate for Bright Choice.

Land Use - Project specific landuses

Construction Phase - Assume 26 days per month (working days), Based on applicant provided information

Off-road Equipment - Default CalEEMod settings

Off-road Equipment - Based on applicant provided information

Off-road Equipment - Based on applicant provided information

Off-road Equipment - Based on applicant provided information

540 San Pablo Avenue CE - Bay Area AQMD Air District, Annual

EMFAC Off-Model Adjustment Factors for Gasoline Light Duty Vehicle to Account for the SAFE Vehicle Rule Applied

Off-road Equipment - Default CalEEMod Settings

Off-road Equipment - Based on applicant provided information

Trips and VMT - Based on applicant provided information: haul truck capacities of 14 CY, and specified truck haul routes (miles)

On-road Fugitive Dust - Default on-road fugitive dust settings

Demolition - Measured square footage using Google Earth, three one-story commercial buildings

Grading - Based on applicant provided information

Architectural Coating - BAAQMD Regulation 8 Rule 3, used Flat Coating and Traffic Marking Coating

Vehicle Trips - Default trip generation rate

Woodstoves - Compliance with BAAQMD Regulation 6 Rule 3: No Fireplaces, Based on applicant provided information

Area Coating - Compliance with BAAQMD Regulation 8 Rule 3: Architectural Coating, Flat Rate and Traffic Marking Coatings

Water And Wastewater - Wastewater treatment plant is 100% aerobic, no septic tank on site or facultative lagoons on wastewater treatment plant.

Construction Off-road Equipment Mitigation - Based on applicant provided information

Mobile Land Use Mitigation - Project is 0.2 miles from a rapid bus stop. Project will construct 21 affordable housing units out of 198 residential units.

Area Mitigation -

Table Name	Column Name	Default Value	New Value
tblArchitecturalCoating	EF_Nonresidential_Exterior	150.00	50.00
tblArchitecturalCoating	EF_Nonresidential_Interior	100.00	50.00
tblArchitecturalCoating	EF_Parking	150.00	100.00
tblArchitecturalCoating	EF_Residential_Exterior	150.00	50.00
tblArchitecturalCoating	EF_Residential_Interior	100.00	50.00
tblAreaCoating	Area_EF_Nonresidential_Exterior	150	50
tblAreaCoating	Area_EF_Nonresidential_Interior	100	50
tblAreaCoating	Area_EF_Parking	150	100
tblAreaCoating	Area_EF_Residential_Exterior	150	50
tblAreaCoating	Area_EF_Residential_Interior	100	50
tblAreaMitigation	UseLowVOCPaintNonresidentialExteriorValue	50	150
tblAreaMitigation	UseLowVOCPaintNonresidentialInteriorValue	50	100

540 San Pablo Avenue CE - Bay Area AQMD Air District, Annual

EMFAC Off-Model Adjustment Factors for Gasoline Light Duty Vehicle to Account for the SAFE Vehicle Rule Applied

tblAreaMitigation	UseLowVOCPaintParkingValue	100	150
tblAreaMitigation	UseLowVOCPaintResidentialExteriorValue	50	150
tblAreaMitigation	UseLowVOCPaintResidentialInteriorValue	50	100
tblConstDustMitigation	WaterUnpavedRoadVehicleSpeed	0	15
tblConstructionPhase	NumDays	20.00	13.00
tblConstructionPhase	NumDays	3.00	13.00
tblConstructionPhase	NumDays	6.00	26.00
tblConstructionPhase	NumDays	220.00	806.00
tblConstructionPhase	NumDays	10.00	26.00
tblConstructionPhase	NumDays	10.00	52.00
tblConstructionPhase	NumDaysWeek	5.00	6.00
tblConstructionPhase	NumDaysWeek	5.00	6.00
tblConstructionPhase	NumDaysWeek	5.00	6.00
tblConstructionPhase	NumDaysWeek	5.00	6.00
tblConstructionPhase	NumDaysWeek	5.00	6.00
tblConstructionPhase	NumDaysWeek	5.00	6.00
tblFireplaces	FireplaceDayYear	11.14	0.00
tblFireplaces	FireplaceDayYear	11.14	0.00
tblFireplaces	FireplaceHourDay	3.50	0.00
tblFireplaces	FireplaceHourDay	3.50	0.00
tblFireplaces	FireplaceWoodMass	228.80	0.00
tblFireplaces	FireplaceWoodMass	228.80	0.00
tblFireplaces	NumberGas	29.70	0.00
tblFireplaces	NumberGas	1.35	0.00
tblFireplaces	NumberNoFireplace	7.92	0.00
tblFireplaces	NumberNoFireplace	0.36	0.00
tblFireplaces	NumberWood	33.66	0.00
tblFireplaces	NumberWood	1.53	0.00

EMFAC Off-Model Adjustment Factors for Gasoline Light Duty Vehicle to Account for the SAFE Vehicle Rule Applied

tblGrading	MaterialExported	0.00	6,300.00
tblGrading	MaterialExported	0.00	1,150.00
tblLandUse	LandUseSquareFeet	54,800.00	35,396.00
tblLandUse	LandUseSquareFeet	198,000.00	224,859.00
tblLandUse	LandUseSquareFeet	9,000.00	16,326.00
tblLandUse	LotAcreage	1.23	0.00
tblLandUse	LotAcreage	0.22	0.00
tblLandUse	LotAcreage	5.21	2.18
tblLandUse	LotAcreage	0.56	0.00
tblLandUse	LotAcreage	0.13	0.00
tblOffRoadEquipment	HorsePower	84.00	89.00
tblOffRoadEquipment	LoadFactor	0.74	0.20
tblOffRoadEquipment	OffRoadEquipmentUnitAmount	1.00	0.00
tblOffRoadEquipment	OffRoadEquipmentUnitAmount	2.00	1.00
tblOffRoadEquipment	OffRoadEquipmentUnitAmount	1.00	0.00
tblOffRoadEquipment	OffRoadEquipmentUnitAmount	1.00	0.00
tblOffRoadEquipment	OffRoadEquipmentUnitAmount	3.00	0.00
tblOffRoadEquipment	OffRoadEquipmentUnitAmount	1.00	2.00
tblOffRoadEquipment	OffRoadEquipmentUnitAmount	3.00	1.00
tblProjectCharacteristics	CO2IntensityFactor	203.98	135.1
tblTripsAndVMT	HaulingTripLength	20.00	8.00
tblTripsAndVMT	HaulingTripLength	20.00	8.00
tblTripsAndVMT	HaulingTripLength	20.00	15.00
tblTripsAndVMT	HaulingTripNumber	176.00	347.00
tblTripsAndVMT	HaulingTripNumber	144.00	164.00
tblTripsAndVMT	HaulingTripNumber	788.00	900.00
tblWoodstoves	NumberCatalytic	3.96	0.00
tblWoodstoves	NumberCatalytic	0.18	0.00
tblWoodstoves	NumberNoncatalytic	3.96	0.00

EMFAC Off-Model Adjustment Factors for Gasoline Light Duty Vehicle to Account for the SAFE Vehicle Rule Applied

tblWoodstoves	NumberNoncatalytic	0.18	0.00
tblWoodstoves	WoodstoveDayYear	14.12	0.00
tblWoodstoves	WoodstoveDayYear	14.12	0.00
tblWoodstoves	WoodstoveWoodMass	582.40	0.00
tblWoodstoves	WoodstoveWoodMass	582.40	0.00

2.0 Emissions Summary

2.1 Overall Construction

Unmitigated Construction

	ROG	NOx	CO	SO2	Fugitive PM10	Exhaust PM10	PM10 Total	Fugitive PM2.5	Exhaust PM2.5	PM2.5 Total	Bio- CO2	NBio- CO2	Total CO2	CH4	N2O	CO2e
Year	tons/yr										MT/yr					
2022	0.1394	1.1669	1.0533	2.9700e-003	0.2278	0.0460	0.2738	0.0782	0.0435	0.1217	0.0000	268.6509	268.6509	0.0320	0.0126	273.2108
2023	0.2291	1.6260	1.9298	5.2500e-003	0.2403	0.0639	0.3041	0.0646	0.0611	0.1257	0.0000	471.5693	471.5693	0.0452	0.0182	478.1145
2024	0.2156	1.5391	1.8887	5.2100e-003	0.2418	0.0570	0.2988	0.0650	0.0545	0.1195	0.0000	469.0648	469.0648	0.0445	0.0178	475.4711
2025	0.8223	0.3532	0.5076	1.1800e-003	0.0463	0.0139	0.0601	0.0124	0.0131	0.0256	0.0000	105.5103	105.5103	0.0137	2.8500e-003	106.7032
Maximum	**0.8223**	**1.6260**	**1.9298**	**5.2500e-003**	**0.2418**	**0.0639**	**0.3041**	**0.0782**	**0.0611**	**0.1257**	**0.0000**	**471.5693**	**471.5693**	**0.0452**	**0.0182**	**478.1145**

EMFAC Off-Model Adjustment Factors for Gasoline Light Duty Vehicle to Account for the SAFE Vehicle Rule Applied

2.1 Overall Construction

Mitigated Construction

	ROG	NOx	CO	SO2	Fugitive PM10	Exhaust PM10	PM10 Total	Fugitive PM2.5	Exhaust PM2.5	PM2.5 Total	Bio- CO2	NBio- CO2	Total CO2	CH4	N2O	CO2e
Year	tons/yr										MT/yr					
2022	0.1394	1.1669	1.0533	2.9700e-003	0.2278	0.0460	0.2738	0.0782	0.0435	0.1217	0.0000	268.6507	268.6507	0.0320	0.0126	273.2107
2023	0.2291	1.6260	1.9298	5.2500e-003	0.2403	0.0639	0.3041	0.0646	0.0611	0.1257	0.0000	471.5690	471.5690	0.0452	0.0182	478.1143
2024	0.2156	1.5391	1.8887	5.2100e-003	0.2418	0.0570	0.2988	0.0650	0.0545	0.1195	0.0000	469.0646	469.0646	0.0445	0.0178	475.4708
2025	0.8223	0.3532	0.5076	1.1800e-003	0.0463	0.0139	0.0601	0.0124	0.0131	0.0256	0.0000	105.5102	105.5102	0.0137	2.8500e-003	106.7031
Maximum	**0.8223**	**1.6260**	**1.9298**	**5.2500e-003**	**0.2418**	**0.0639**	**0.3041**	**0.0782**	**0.0611**	**0.1257**	**0.0000**	**471.5690**	**471.5690**	**0.0452**	**0.0182**	**478.1143**

	ROG	NOx	CO	SO2	Fugitive PM10	Exhaust PM10	PM10 Total	Fugitive PM2.5	Exhaust PM2.5	PM2.5 Total	Bio- CO2	NBio-CO2	Total CO2	CH4	N20	CO2e
Percent Reduction	**0.00**	**0.00**	**0.00**	**0.00**	**0.00**	**0.00**	**0.00**	**0.00**	**0.01**	**0.00**	**0.00**	**0.00**	**0.00**	**0.00**	**0.00**	**0.00**

Quarter	Start Date	End Date	Maximum Unmitigated ROG + NOX (tons/quarter)	Maximum Mitigated ROG + NOX (tons/quarter)
1	**6-1-2022**	**8-31-2022**	0.6169	0.6169
2	**9-1-2022**	**11-30-2022**	0.5135	0.5135
3	**12-1-2022**	**2-28-2023**	0.4787	0.4787
4	**3-1-2023**	**5-31-2023**	0.4686	0.4686
5	**6-1-2023**	**8-31-2023**	0.4667	0.4667
6	**9-1-2023**	**11-30-2023**	0.4655	0.4655
7	**12-1-2023**	**2-29-2024**	0.4488	0.4488
8	**3-1-2024**	**5-31-2024**	0.4404	0.4404

EMFAC Off-Model Adjustment Factors for Gasoline Light Duty Vehicle to Account for the SAFE Vehicle Rule Applied

9	**6-1-2024**	**8-31-2024**	0.4385	0.4385
10	**9-1-2024**	**11-30-2024**	0.4375	0.4375
11	**12-1-2024**	**2-28-2025**	0.4148	0.4148
12	**3-1-2025**	**5-31-2025**	0.9149	0.9149
		Highest	0.9149	0.9149

2.2 Overall Operational

Unmitigated Operational

	ROG	NOx	CO	SO2	Fugitive PM10	Exhaust PM10	PM10 Total	Fugitive PM2.5	Exhaust PM2.5	PM2.5 Total	Bio- CO2	NBio- CO2	Total CO2	CH4	N2O	CO2e
Category	tons/yr										MT/yr					
Area	1.0900	0.0177	1.5371	8.0000e-005		8.5300e-003	8.5300e-003		8.5300e-003	8.5300e-003	0.0000	2.5137	2.5137	2.4100e-003	0.0000	2.5740
Energy	0.0102	0.0869	0.0375	5.5000e-004		7.0200e-003	7.0200e-003		7.0200e-003	7.0200e-003	0.0000	165.8410	165.8410	0.0179	3.7800e-003	167.4133
Mobile	0.5105	0.5569	4.6647	9.5400e-003	1.0542	7.1100e-003	1.0614	0.2817	6.6300e-003	0.2883	0.0000	902.7617	902.7617	0.0600	0.0438	917.3103
Waste						0.0000	0.0000		0.0000	0.0000	20.5021	0.0000	20.5021	1.2116	0.0000	50.7931
Water						0.0000	0.0000		0.0000	0.0000	4.4080	6.4844	10.8924	0.4543	0.0109	25.4936
Total	**1.6106**	**0.6615**	**6.2393**	**0.0102**	**1.0542**	**0.0227**	**1.0769**	**0.2817**	**0.0222**	**0.3038**	**24.9101**	**1,077.6008**	**1,102.5109**	**1.7463**	**0.0584**	**1,163.5841**

EMFAC Off-Model Adjustment Factors for Gasoline Light Duty Vehicle to Account for the SAFE Vehicle Rule Applied

2.2 Overall Operational

Mitigated Operational

	ROG	NOx	CO	SO2	Fugitive PM10	Exhaust PM10	PM10 Total	Fugitive PM2.5	Exhaust PM2.5	PM2.5 Total	Bio- CO2	NBio- CO2	Total CO2	CH4	N2O	CO2e
Category	tons/yr										MT/yr					
Area	1.0900	0.0177	1.5371	8.0000e-005		8.5300e-003	8.5300e-003		8.5300e-003	8.5300e-003	0.0000	2.5137	2.5137	2.4100e-003	0.0000	2.5740
Energy	0.0102	0.0869	0.0375	5.5000e-004		7.0200e-003	7.0200e-003		7.0200e-003	7.0200e-003	0.0000	165.8410	165.8410	0.0179	3.7800e-003	167.4133
Mobile	0.4698	0.4822	4.0497	7.8600e-003	0.8618	5.9800e-003	0.8678	0.2303	5.5700e-003	0.2358	0.0000	743.5984	743.5984	0.0537	0.0380	756.2692
Waste						0.0000	0.0000		0.0000	0.0000	20.5021	0.0000	20.5021	1.2116	0.0000	50.7931
Water						0.0000	0.0000		0.0000	0.0000	4.4080	6.4844	10.8924	0.4543	0.0109	25.4936
Total	**1.5699**	**0.5868**	**5.6243**	**8.4900e-003**	**0.8618**	**0.0215**	**0.8834**	**0.2303**	**0.0211**	**0.2514**	**24.9101**	**918.4374**	**943.3475**	**1.7400**	**0.0527**	**1,002.5431**

	ROG	NOx	CO	SO2	Fugitive PM10	Exhaust PM10	PM10 Total	Fugitive PM2.5	Exhaust PM2.5	PM2.5 Total	Bio- CO2	NBio-CO2	Total CO2	CH4	N20	CO2e
Percent Reduction	**2.53**	**11.29**	**9.86**	**16.52**	**18.25**	**4.99**	**17.97**	**18.25**	**4.78**	**17.27**	**0.00**	**14.77**	**14.44**	**0.36**	**9.87**	**13.84**

3.0 Construction Detail

Construction Phase

Phase Number	Phase Name	Phase Type	Start Date	End Date	Num Days Week	Num Days	Phase Description
1	Demolition	Demolition	6/1/2022	6/15/2022	6	13	
2	Site Preparation	Site Preparation	6/16/2022	6/30/2022	6	13	
3	Grading	Grading	7/2/2022	8/1/2022	6	26	

EMFAC Off-Model Adjustment Factors for Gasoline Light Duty Vehicle to Account for the SAFE Vehicle Rule Applied

4	Building Construction	Building Construction	8/2/2022	2/26/2025	6	806	
5	Paving	Paving	2/27/2025	3/28/2025	6	26	
6	Architectural Coating	Architectural Coating	3/29/2025	5/28/2025	6	52	

Acres of Grading (Site Preparation Phase): 6.5

Acres of Grading (Grading Phase): 26

Acres of Paving: 0

Residential Indoor: 488,400; Residential Outdoor: 162,800; Non-Residential Indoor: 8,250; Non-Residential Outdoor: 2,750; Striped Parking Area: 2,724 (Architectural Coating – sqft)

OffRoad Equipment

Phase Name	Offroad Equipment Type	Amount	Usage Hours	Horse Power	Load Factor
Demolition	Air Compressors	1		78	0.48
Demolition	Concrete/Industrial Saws	0	8.00	81	0.73
Demolition	Crushing/Proc. Equipment	1		85	0.78
Demolition	Dumpers/Tenders	1		16	0.38
Demolition	Excavators	1		158	0.38
Demolition	Rubber Tired Dozers	1	8.00	247	0.40
Demolition	Skid Steer Loaders	1		65	0.37
Demolition	Tractors/Loaders/Backhoes	0	8.00	97	0.37
Site Preparation	Crushing/Proc. Equipment	1		85	0.78
Site Preparation	Dumpers/Tenders	1		16	0.38
Site Preparation	Excavators	1		158	0.38
Site Preparation	Graders	1	8.00	187	0.41
Site Preparation	Plate Compactors	1		8	0.43
Site Preparation	Rubber Tired Dozers	1		247	0.40
Site Preparation	Scrapers	0	8.00	367	0.48
Site Preparation	Skid Steer Loaders	1		65	0.37
Site Preparation	Tractors/Loaders/Backhoes	2	7.00	97	0.37

EMFAC Off-Model Adjustment Factors for Gasoline Light Duty Vehicle to Account for the SAFE Vehicle Rule Applied

Grading	Dumpers/Tenders	1		16	0.38
Grading	Excavators	1		158	0.38
Grading	Graders	1	8.00	187	0.41
Grading	Plate Compactors	1		8	0.43
Grading	Rubber Tired Dozers	1	8.00	247	0.40
Grading	Rubber Tired Loaders	0		203	0.36
Grading	Scrapers	1		367	0.48
Grading	Skid Steer Loaders	1		65	0.37
Grading	Tractors/Loaders/Backhoes	2	7.00	97	0.37
Grading	Trenchers	1		78	0.50
Building Construction	Aerial Lifts	1		63	0.31
Building Construction	Cranes	1	8.00	231	0.29
Building Construction	Excavators	1		158	0.38
Building Construction	Forklifts	1	7.00	89	0.20
Building Construction	Generator Sets	1	8.00	84	0.74
Building Construction	Pumps	1		89	0.20
Building Construction	Rough Terrain Forklifts	1		100	0.40
Building Construction	Tractors/Loaders/Backhoes	0	6.00	97	0.37
Building Construction	Welders	1	8.00	46	0.45
Paving	Cement and Mortar Mixers	1	8.00	9	0.56
Paving	Pavers	1	8.00	130	0.42
Paving	Paving Equipment	1	8.00	132	0.36
Paving	Rollers	2	8.00	80	0.38
Paving	Tractors/Loaders/Backhoes	1	8.00	97	0.37
Architectural Coating	Air Compressors	1	6.00	78	0.48

Trips and VMT

EMFAC Off-Model Adjustment Factors for Gasoline Light Duty Vehicle to Account for the SAFE Vehicle Rule Applied

Phase Name	Offroad Equipment Count	Worker Trip Number	Vendor Trip Number	Hauling Trip Number	Worker Trip Length	Vendor Trip Length	Hauling Trip Length	Worker Vehicle Class	Vendor Vehicle Class	Hauling Vehicle Class
Demolition	6	15.00	0.00	347.00	10.80	7.30	8.00	LD_Mix	HDT_Mix	HHDT
Site Preparation	9	23.00	0.00	164.00	10.80	7.30	8.00	LD_Mix	HDT_Mix	HHDT
Grading	10	25.00	0.00	900.00	10.80	7.30	15.00	LD_Mix	HDT_Mix	HHDT
Building Construction	8	170.00	30.00	0.00	10.80	7.30	20.00	LD_Mix	HDT_Mix	HHDT
Paving	6	15.00	0.00	0.00	10.80	7.30	20.00	LD_Mix	HDT_Mix	HHDT
Architectural Coating	1	34.00	0.00	0.00	10.80	7.30	20.00	LD_Mix	HDT_Mix	HHDT

3.1 Mitigation Measures Construction

Water Exposed Area

3.2 Demolition - 2022

Unmitigated Construction On-Site

	ROG	NOx	CO	SO2	Fugitive PM10	Exhaust PM10	PM10 Total	Fugitive PM2.5	Exhaust PM2.5	PM2.5 Total	Bio- CO2	NBio- CO2	Total CO2	CH4	N2O	CO2e
Category	tons/yr										MT/yr					
Fugitive Dust					0.0190	0.0000	0.0190	2.8800e-003	0.0000	2.8800e-003	0.0000	0.0000	0.0000	0.0000	0.0000	0.0000
Off-Road	5.4400e-003	0.0572	0.0233	6.0000e-005		2.7100e-003	2.7100e-003		2.5000e-003	2.5000e-003	0.0000	4.8768	4.8768	1.5800e-003	0.0000	4.9162
Total	**5.4400e-003**	**0.0572**	**0.0233**	**6.0000e-005**	**0.0190**	**2.7100e-003**	**0.0217**	**2.8800e-003**	**2.5000e-003**	**5.3800e-003**	**0.0000**	**4.8768**	**4.8768**	**1.5800e-003**	**0.0000**	**4.9162**

EMFAC Off-Model Adjustment Factors for Gasoline Light Duty Vehicle to Account for the SAFE Vehicle Rule Applied

3.2 Demolition - 2022

Unmitigated Construction Off-Site

	ROG	NOx	CO	SO2	Fugitive PM10	Exhaust PM10	PM10 Total	Fugitive PM2.5	Exhaust PM2.5	PM2.5 Total	Bio- CO2	NBio- CO2	Total CO2	CH4	N2O	CO2e
Category	tons/yr										MT/yr					
Hauling	4.2000e-004	0.0139	3.9200e-003	5.0000e-005	1.1800e-003	1.1000e-004	1.2800e-003	3.2000e-004	1.0000e-004	4.3000e-004	0.0000	4.6114	4.6114	1.5000e-004	7.3000e-004	4.8328
Vendor	0.0000	0.0000	0.0000	0.0000	0.0000	0.0000	0.0000	0.0000	0.0000	0.0000	0.0000	0.0000	0.0000	0.0000	0.0000	0.0000
Worker	2.7000e-004	1.9000e-004	2.3300e-003	1.0000e-005	7.7000e-004	0.0000	7.7000e-004	2.0000e-004	0.0000	2.1000e-004	0.0000	0.6196	0.6196	2.0000e-005	2.0000e-005	0.6254
Total	**6.9000e-004**	**0.0141**	**6.2500e-003**	**6.0000e-005**	**1.9500e-003**	**1.1000e-004**	**2.0500e-003**	**5.2000e-004**	**1.0000e-004**	**6.4000e-004**	**0.0000**	**5.2311**	**5.2311**	**1.7000e-004**	**7.5000e-004**	**5.4582**

Mitigated Construction On-Site

	ROG	NOx	CO	SO2	Fugitive PM10	Exhaust PM10	PM10 Total	Fugitive PM2.5	Exhaust PM2.5	PM2.5 Total	Bio- CO2	NBio- CO2	Total CO2	CH4	N2O	CO2e
Category	tons/yr										MT/yr					
Fugitive Dust					0.0190	0.0000	0.0190	2.8800e-003	0.0000	2.8800e-003	0.0000	0.0000	0.0000	0.0000	0.0000	0.0000
Off-Road	5.4400e-003	0.0572	0.0233	6.0000e-005		2.7100e-003	2.7100e-003		2.5000e-003	2.5000e-003	0.0000	4.8768	4.8768	1.5800e-003	0.0000	4.9162
Total	**5.4400e-003**	**0.0572**	**0.0233**	**6.0000e-005**	**0.0190**	**2.7100e-003**	**0.0217**	**2.8800e-003**	**2.5000e-003**	**5.3800e-003**	**0.0000**	**4.8768**	**4.8768**	**1.5800e-003**	**0.0000**	**4.9162**

EMFAC Off-Model Adjustment Factors for Gasoline Light Duty Vehicle to Account for the SAFE Vehicle Rule Applied

3.2 Demolition - 2022

Mitigated Construction Off-Site

	ROG	NOx	CO	SO2	Fugitive PM10	Exhaust PM10	PM10 Total	Fugitive PM2.5	Exhaust PM2.5	PM2.5 Total	Bio- CO2	NBio- CO2	Total CO2	CH4	N2O	CO2e
Category	tons/yr										MT/yr					
Hauling	4.2000e-004	0.0139	3.9200e-003	5.0000e-005	1.1800e-003	1.1000e-004	1.2800e-003	3.2000e-004	1.0000e-004	4.3000e-004	0.0000	4.6114	4.6114	1.5000e-004	7.3000e-004	4.8328
Vendor	0.0000	0.0000	0.0000	0.0000	0.0000	0.0000	0.0000	0.0000	0.0000	0.0000	0.0000	0.0000	0.0000	0.0000	0.0000	0.0000
Worker	2.7000e-004	1.9000e-004	2.3300e-003	1.0000e-005	7.7000e-004	0.0000	7.7000e-004	2.0000e-004	0.0000	2.1000e-004	0.0000	0.6196	0.6196	2.0000e-005	2.0000e-005	0.6254
Total	**6.9000e-004**	**0.0141**	**6.2500e-003**	**6.0000e-005**	**1.9500e-003**	**1.1000e-004**	**2.0500e-003**	**5.2000e-004**	**1.0000e-004**	**6.4000e-004**	**0.0000**	**5.2311**	**5.2311**	**1.7000e-004**	**7.5000e-004**	**5.4582**

3.3 Site Preparation - 2022

Unmitigated Construction On-Site

	ROG	NOx	CO	SO2	Fugitive PM10	Exhaust PM10	PM10 Total	Fugitive PM2.5	Exhaust PM2.5	PM2.5 Total	Bio- CO2	NBio- CO2	Total CO2	CH4	N2O	CO2e
Category	tons/yr										MT/yr					
Fugitive Dust					3.5100e-003	0.0000	3.5100e-003	3.8000e-004	0.0000	3.8000e-004	0.0000	0.0000	0.0000	0.0000	0.0000	0.0000
Off-Road	4.5700e-003	0.0532	0.0367	8.0000e-005		2.1100e-003	2.1100e-003		1.9400e-003	1.9400e-003	0.0000	6.8900	6.8900	2.2300e-003	0.0000	6.9457
Total	**4.5700e-003**	**0.0532**	**0.0367**	**8.0000e-005**	**3.5100e-003**	**2.1100e-003**	**5.6200e-003**	**3.8000e-004**	**1.9400e-003**	**2.3200e-003**	**0.0000**	**6.8900**	**6.8900**	**2.2300e-003**	**0.0000**	**6.9457**

EMFAC Off-Model Adjustment Factors for Gasoline Light Duty Vehicle to Account for the SAFE Vehicle Rule Applied

3.3 Site Preparation - 2022

Unmitigated Construction Off-Site

	ROG	NOx	CO	SO2	Fugitive PM10	Exhaust PM10	PM10 Total	Fugitive PM2.5	Exhaust PM2.5	PM2.5 Total	Bio- CO2	NBio- CO2	Total CO2	CH4	N2O	CO2e
Category	tons/yr										MT/yr					
Hauling	2.0000e-004	6.5500e-003	1.8500e-003	2.0000e-005	5.6000e-004	5.0000e-005	6.1000e-004	1.5000e-004	5.0000e-005	2.0000e-004	0.0000	2.1795	2.1795	7.0000e-005	3.5000e-004	2.2841
Vendor	0.0000	0.0000	0.0000	0.0000	0.0000	0.0000	0.0000	0.0000	0.0000	0.0000	0.0000	0.0000	0.0000	0.0000	0.0000	0.0000
Worker	4.1000e-004	3.0000e-004	3.5800e-003	1.0000e-005	1.1800e-003	1.0000e-005	1.1900e-003	3.1000e-004	1.0000e-005	3.2000e-004	0.0000	0.9501	0.9501	3.0000e-005	3.0000e-005	0.9590
Total	**6.1000e-004**	**6.8500e-003**	**5.4300e-003**	**3.0000e-005**	**1.7400e-003**	**6.0000e-005**	**1.8000e-003**	**4.6000e-004**	**6.0000e-005**	**5.2000e-004**	**0.0000**	**3.1296**	**3.1296**	**1.0000e-004**	**3.8000e-004**	**3.2431**

Mitigated Construction On-Site

	ROG	NOx	CO	SO2	Fugitive PM10	Exhaust PM10	PM10 Total	Fugitive PM2.5	Exhaust PM2.5	PM2.5 Total	Bio- CO2	NBio- CO2	Total CO2	CH4	N2O	CO2e
Category	tons/yr										MT/yr					
Fugitive Dust					3.5100e-003	0.0000	3.5100e-003	3.8000e-004	0.0000	3.8000e-004	0.0000	0.0000	0.0000	0.0000	0.0000	0.0000
Off-Road	4.5700e-003	0.0532	0.0367	8.0000e-005		2.1100e-003	2.1100e-003		1.9400e-003	1.9400e-003	0.0000	6.8900	6.8900	2.2300e-003	0.0000	6.9457
Total	**4.5700e-003**	**0.0532**	**0.0367**	**8.0000e-005**	**3.5100e-003**	**2.1100e-003**	**5.6200e-003**	**3.8000e-004**	**1.9400e-003**	**2.3200e-003**	**0.0000**	**6.8900**	**6.8900**	**2.2300e-003**	**0.0000**	**6.9457**

EMFAC Off-Model Adjustment Factors for Gasoline Light Duty Vehicle to Account for the SAFE Vehicle Rule Applied

3.3 Site Preparation - 2022

Mitigated Construction Off-Site

	ROG	NOx	CO	SO2	Fugitive PM10	Exhaust PM10	PM10 Total	Fugitive PM2.5	Exhaust PM2.5	PM2.5 Total	Bio- CO2	NBio- CO2	Total CO2	CH4	N2O	CO2e
Category	tons/yr										MT/yr					
Hauling	2.0000e-004	6.5500e-003	1.8500e-003	2.0000e-005	5.6000e-004	5.0000e-005	6.1000e-004	1.5000e-004	5.0000e-005	2.0000e-004	0.0000	2.1795	2.1795	7.0000e-005	3.5000e-004	2.2841
Vendor	0.0000	0.0000	0.0000	0.0000	0.0000	0.0000	0.0000	0.0000	0.0000	0.0000	0.0000	0.0000	0.0000	0.0000	0.0000	0.0000
Worker	4.1000e-004	3.0000e-004	3.5800e-003	1.0000e-005	1.1800e-003	1.0000e-005	1.1900e-003	3.1000e-004	1.0000e-005	3.2000e-004	0.0000	0.9501	0.9501	3.0000e-005	3.0000e-005	0.9590
Total	**6.1000e-004**	**6.8500e-003**	**5.4300e-003**	**3.0000e-005**	**1.7400e-003**	**6.0000e-005**	**1.8000e-003**	**4.6000e-004**	**6.0000e-005**	**5.2000e-004**	**0.0000**	**3.1296**	**3.1296**	**1.0000e-004**	**3.8000e-004**	**3.2431**

3.4 Grading - 2022

Unmitigated Construction On-Site

	ROG	NOx	CO	SO2	Fugitive PM10	Exhaust PM10	PM10 Total	Fugitive PM2.5	Exhaust PM2.5	PM2.5 Total	Bio- CO2	NBio- CO2	Total CO2	CH4	N2O	CO2e
Category	tons/yr										MT/yr					
Fugitive Dust					0.0924	0.0000	0.0924	0.0446	0.0000	0.0446	0.0000	0.0000	0.0000	0.0000	0.0000	0.0000
Off-Road	0.0200	0.2208	0.1199	2.7000e-004		9.6500e-003	9.6500e-003		8.8800e-003	8.8800e-003	0.0000	23.5335	23.5335	7.6100e-003	0.0000	23.7238
Total	**0.0200**	**0.2208**	**0.1199**	**2.7000e-004**	**0.0924**	**9.6500e-003**	**0.1021**	**0.0446**	**8.8800e-003**	**0.0535**	**0.0000**	**23.5335**	**23.5335**	**7.6100e-003**	**0.0000**	**23.7238**

EMFAC Off-Model Adjustment Factors for Gasoline Light Duty Vehicle to Account for the SAFE Vehicle Rule Applied

3.4 Grading - 2022

Unmitigated Construction Off-Site

	ROG	NOx	CO	SO2	Fugitive PM10	Exhaust PM10	PM10 Total	Fugitive PM2.5	Exhaust PM2.5	PM2.5 Total	Bio- CO2	NBio- CO2	Total CO2	CH4	N2O	CO2e
Category	tons/yr										MT/yr					
Hauling	1.6800e-003	0.0602	0.0139	2.2000e-004	5.7100e-003	5.2000e-004	6.2300e-003	1.5700e-003	5.0000e-004	2.0700e-003	0.0000	21.4382	21.4382	7.0000e-004	3.4000e-003	22.4676
Vendor	0.0000	0.0000	0.0000	0.0000	0.0000	0.0000	0.0000	0.0000	0.0000	0.0000	0.0000	0.0000	0.0000	0.0000	0.0000	0.0000
Worker	8.9000e-004	6.4000e-004	7.7700e-003	2.0000e-005	2.5700e-003	1.0000e-005	2.5800e-003	6.8000e-004	1.0000e-005	7.0000e-004	0.0000	2.0654	2.0654	6.0000e-005	6.0000e-005	2.0848
Total	**2.5700e-003**	**0.0608**	**0.0216**	**2.4000e-004**	**8.2800e-003**	**5.3000e-004**	**8.8100e-003**	**2.2500e-003**	**5.1000e-004**	**2.7700e-003**	**0.0000**	**23.5036**	**23.5036**	**7.6000e-004**	**3.4600e-003**	**24.5524**

Mitigated Construction On-Site

	ROG	NOx	CO	SO2	Fugitive PM10	Exhaust PM10	PM10 Total	Fugitive PM2.5	Exhaust PM2.5	PM2.5 Total	Bio- CO2	NBio- CO2	Total CO2	CH4	N2O	CO2e
Category	tons/yr										MT/yr					
Fugitive Dust					0.0924	0.0000	0.0924	0.0446	0.0000	0.0446	0.0000	0.0000	0.0000	0.0000	0.0000	0.0000
Off-Road	0.0200	0.2208	0.1199	2.7000e-004		9.6500e-003	9.6500e-003		8.8800e-003	8.8800e-003	0.0000	23.5335	23.5335	7.6100e-003	0.0000	23.7238
Total	**0.0200**	**0.2208**	**0.1199**	**2.7000e-004**	**0.0924**	**9.6500e-003**	**0.1021**	**0.0446**	**8.8800e-003**	**0.0535**	**0.0000**	**23.5335**	**23.5335**	**7.6100e-003**	**0.0000**	**23.7238**

EMFAC Off-Model Adjustment Factors for Gasoline Light Duty Vehicle to Account for the SAFE Vehicle Rule Applied

3.4 Grading - 2022

Mitigated Construction Off-Site

	ROG	NOx	CO	SO2	Fugitive PM10	Exhaust PM10	PM10 Total	Fugitive PM2.5	Exhaust PM2.5	PM2.5 Total	Bio- CO2	NBio- CO2	Total CO2	CH4	N2O	CO2e
Category	tons/yr										MT/yr					
Hauling	1.6800e-003	0.0602	0.0139	2.2000e-004	5.7100e-003	5.2000e-004	6.2300e-003	1.5700e-003	5.0000e-004	2.0700e-003	0.0000	21.4382	21.4382	7.0000e-004	3.4000e-003	22.4676
Vendor	0.0000	0.0000	0.0000	0.0000	0.0000	0.0000	0.0000	0.0000	0.0000	0.0000	0.0000	0.0000	0.0000	0.0000	0.0000	0.0000
Worker	8.9000e-004	6.4000e-004	7.7700e-003	2.0000e-005	2.5700e-003	1.0000e-005	2.5800e-003	6.8000e-004	1.0000e-005	7.0000e-004	0.0000	2.0654	2.0654	6.0000e-005	6.0000e-005	2.0848
Total	**2.5700e-003**	**0.0608**	**0.0216**	**2.4000e-004**	**8.2800e-003**	**5.3000e-004**	**8.8100e-003**	**2.2500e-003**	**5.1000e-004**	**2.7700e-003**	**0.0000**	**23.5036**	**23.5036**	**7.6000e-004**	**3.4600e-003**	**24.5524**

3.5 Building Construction - 2022

Unmitigated Construction On-Site

	ROG	NOx	CO	SO2	Fugitive PM10	Exhaust PM10	PM10 Total	Fugitive PM2.5	Exhaust PM2.5	PM2.5 Total	Bio- CO2	NBio- CO2	Total CO2	CH4	N2O	CO2e
Category	tons/yr										MT/yr					
Off-Road	0.0707	0.6222	0.5419	1.0600e-003		0.0292	0.0292		0.0280	0.0280	0.0000	90.2522	90.2522	0.0165	0.0000	90.6637
Total	**0.0707**	**0.6222**	**0.5419**	**1.0600e-003**		**0.0292**	**0.0292**		**0.0280**	**0.0280**	**0.0000**	**90.2522**	**90.2522**	**0.0165**	**0.0000**	**90.6637**

EMFAC Off-Model Adjustment Factors for Gasoline Light Duty Vehicle to Account for the SAFE Vehicle Rule Applied

3.5 Building Construction - 2022

Unmitigated Construction Off-Site

	ROG	NOx	CO	SO2	Fugitive PM10	Exhaust PM10	PM10 Total	Fugitive PM2.5	Exhaust PM2.5	PM2.5 Total	Bio- CO2	NBio- CO2	Total CO2	CH4	N2O	CO2e
Category	tons/yr										MT/yr					
Hauling	0.0000	0.0000	0.0000	0.0000	0.0000	0.0000	0.0000	0.0000	0.0000	0.0000	0.0000	0.0000	0.0000	0.0000	0.0000	0.0000
Vendor	4.2000e-003	0.1098	0.0320	4.2000e-004	0.0129	1.1300e-003	0.0140	3.7300e-003	1.0800e-003	4.8100e-003	0.0000	40.4697	40.4697	8.8000e-004	6.0000e-003	42.2799
Worker	0.0306	0.0220	0.2663	7.7000e-004	0.0880	4.8000e-004	0.0885	0.0234	4.4000e-004	0.0239	0.0000	70.7645	70.7645	2.1900e-003	2.0400e-003	71.4278
Total	**0.0348**	**0.1318**	**0.2983**	**1.1900e-003**	**0.1009**	**1.6100e-003**	**0.1025**	**0.0271**	**1.5200e-003**	**0.0287**	**0.0000**	**111.2342**	**111.2342**	**3.0700e-003**	**8.0400e-003**	**113.7077**

Mitigated Construction On-Site

	ROG	NOx	CO	SO2	Fugitive PM10	Exhaust PM10	PM10 Total	Fugitive PM2.5	Exhaust PM2.5	PM2.5 Total	Bio- CO2	NBio- CO2	Total CO2	CH4	N2O	CO2e
Category	tons/yr										MT/yr					
Off-Road	0.0707	0.6222	0.5419	1.0600e-003		0.0292	0.0292		0.0280	0.0280	0.0000	90.2520	90.2520	0.0165	0.0000	90.6636
Total	**0.0707**	**0.6222**	**0.5419**	**1.0600e-003**		**0.0292**	**0.0292**		**0.0280**	**0.0280**	**0.0000**	**90.2520**	**90.2520**	**0.0165**	**0.0000**	**90.6636**

EMFAC Off-Model Adjustment Factors for Gasoline Light Duty Vehicle to Account for the SAFE Vehicle Rule Applied

3.5 Building Construction - 2022

Mitigated Construction Off-Site

	ROG	NOx	CO	SO2	Fugitive PM10	Exhaust PM10	PM10 Total	Fugitive PM2.5	Exhaust PM2.5	PM2.5 Total	Bio- CO2	NBio- CO2	Total CO2	CH4	N2O	CO2e
Category	tons/yr										MT/yr					
Hauling	0.0000	0.0000	0.0000	0.0000	0.0000	0.0000	0.0000	0.0000	0.0000	0.0000	0.0000	0.0000	0.0000	0.0000	0.0000	0.0000
Vendor	4.2000e-003	0.1098	0.0320	4.2000e-004	0.0129	1.1300e-003	0.0140	3.7300e-003	1.0800e-003	4.8100e-003	0.0000	40.4697	40.4697	8.8000e-004	6.0000e-003	42.2799
Worker	0.0306	0.0220	0.2663	7.7000e-004	0.0880	4.8000e-004	0.0885	0.0234	4.4000e-004	0.0239	0.0000	70.7645	70.7645	2.1900e-003	2.0400e-003	71.4278
Total	**0.0348**	**0.1318**	**0.2983**	**1.1900e-003**	**0.1009**	**1.6100e-003**	**0.1025**	**0.0271**	**1.5200e-003**	**0.0287**	**0.0000**	**111.2342**	**111.2342**	**3.0700e-003**	**8.0400e-003**	**113.7077**

3.5 Building Construction - 2023

Unmitigated Construction On-Site

	ROG	NOx	CO	SO2	Fugitive PM10	Exhaust PM10	PM10 Total	Fugitive PM2.5	Exhaust PM2.5	PM2.5 Total	Bio- CO2	NBio- CO2	Total CO2	CH4	N2O	CO2e
Category	tons/yr										MT/yr					
Off-Road	0.1562	1.3715	1.2766	2.5300e-003		0.0616	0.0616		0.0589	0.0589	0.0000	214.9501	214.9501	0.0386	0.0000	215.9148
Total	**0.1562**	**1.3715**	**1.2766**	**2.5300e-003**		**0.0616**	**0.0616**		**0.0589**	**0.0589**	**0.0000**	**214.9501**	**214.9501**	**0.0386**	**0.0000**	**215.9148**

EMFAC Off-Model Adjustment Factors for Gasoline Light Duty Vehicle to Account for the SAFE Vehicle Rule Applied

3.5 Building Construction - 2023

Unmitigated Construction Off-Site

	ROG	NOx	CO	SO2	Fugitive PM10	Exhaust PM10	PM10 Total	Fugitive PM2.5	Exhaust PM2.5	PM2.5 Total	Bio- CO2	NBio- CO2	Total CO2	CH4	N2O	CO2e
Category	tons/yr										MT/yr					
Hauling	0.0000	0.0000	0.0000	0.0000	0.0000	0.0000	0.0000	0.0000	0.0000	0.0000	0.0000	0.0000	0.0000	0.0000	0.0000	0.0000
Vendor	4.9900e-003	0.2081	0.0651	9.5000e-004	0.0307	1.2200e-003	0.0319	8.8800e-003	1.1600e-003	0.0101	0.0000	92.3811	92.3811	1.8800e-003	0.0137	96.5007
Worker	0.0679	0.0465	0.5881	1.7700e-003	0.2096	1.0800e-003	0.2106	0.0558	9.9000e-004	0.0567	0.0000	164.2381	164.2381	4.7200e-003	4.5100e-003	165.6991
Total	**0.0729**	**0.2545**	**0.6532**	**2.7200e-003**	**0.2403**	**2.3000e-003**	**0.2426**	**0.0646**	**2.1500e-003**	**0.0668**	**0.0000**	**256.6192**	**256.6192**	**6.6000e-003**	**0.0182**	**262.1997**

Mitigated Construction On-Site

	ROG	NOx	CO	SO2	Fugitive PM10	Exhaust PM10	PM10 Total	Fugitive PM2.5	Exhaust PM2.5	PM2.5 Total	Bio- CO2	NBio- CO2	Total CO2	CH4	N2O	CO2e
Category	tons/yr										MT/yr					
Off-Road	0.1562	1.3715	1.2766	2.5300e-003		0.0616	0.0616		0.0589	0.0589	0.0000	214.9499	214.9499	0.0386	0.0000	215.9146
Total	**0.1562**	**1.3715**	**1.2766**	**2.5300e-003**		**0.0616**	**0.0616**		**0.0589**	**0.0589**	**0.0000**	**214.9499**	**214.9499**	**0.0386**	**0.0000**	**215.9146**

EMFAC Off-Model Adjustment Factors for Gasoline Light Duty Vehicle to Account for the SAFE Vehicle Rule Applied

3.5 Building Construction - 2023

Mitigated Construction Off-Site

	ROG	NOx	CO	SO2	Fugitive PM10	Exhaust PM10	PM10 Total	Fugitive PM2.5	Exhaust PM2.5	PM2.5 Total	Bio- CO2	NBio- CO2	Total CO2	CH4	N2O	CO2e
Category	tons/yr										MT/yr					
Hauling	0.0000	0.0000	0.0000	0.0000	0.0000	0.0000	0.0000	0.0000	0.0000	0.0000	0.0000	0.0000	0.0000	0.0000	0.0000	0.0000
Vendor	4.9900e-003	0.2081	0.0651	9.5000e-004	0.0307	1.2200e-003	0.0319	8.8800e-003	1.1600e-003	0.0101	0.0000	92.3811	92.3811	1.8800e-003	0.0137	96.5007
Worker	0.0679	0.0465	0.5881	1.7700e-003	0.2096	1.0800e-003	0.2106	0.0558	9.9000e-004	0.0567	0.0000	164.2381	164.2381	4.7200e-003	4.5100e-003	165.6991
Total	**0.0729**	**0.2545**	**0.6532**	**2.7200e-003**	**0.2403**	**2.3000e-003**	**0.2426**	**0.0646**	**2.1500e-003**	**0.0668**	**0.0000**	**256.6192**	**256.6192**	**6.6000e-003**	**0.0182**	**262.1997**

3.5 Building Construction - 2024

Unmitigated Construction On-Site

	ROG	NOx	CO	SO2	Fugitive PM10	Exhaust PM10	PM10 Total	Fugitive PM2.5	Exhaust PM2.5	PM2.5 Total	Bio- CO2	NBio- CO2	Total CO2	CH4	N2O	CO2e
Category	tons/yr										MT/yr					
Off-Road	0.1468	1.2878	1.2716	2.5500e-003		0.0547	0.0547		0.0523	0.0523	0.0000	216.3263	216.3263	0.0383	0.0000	217.2842
Total	**0.1468**	**1.2878**	**1.2716**	**2.5500e-003**		**0.0547**	**0.0547**		**0.0523**	**0.0523**	**0.0000**	**216.3263**	**216.3263**	**0.0383**	**0.0000**	**217.2842**

EMFAC Off-Model Adjustment Factors for Gasoline Light Duty Vehicle to Account for the SAFE Vehicle Rule Applied

3.5 Building Construction - 2024

Unmitigated Construction Off-Site

	ROG	NOx	CO	SO2	Fugitive PM10	Exhaust PM10	PM10 Total	Fugitive PM2.5	Exhaust PM2.5	PM2.5 Total	Bio- CO2	NBio- CO2	Total CO2	CH4	N2O	CO2e
Category	tons/yr										MT/yr					
Hauling	0.0000	0.0000	0.0000	0.0000	0.0000	0.0000	0.0000	0.0000	0.0000	0.0000	0.0000	0.0000	0.0000	0.0000	0.0000	0.0000
Vendor	4.8800e-003	0.2095	0.0641	9.4000e-004	0.0309	1.2400e-003	0.0321	8.9400e-003	1.1800e-003	0.0101	0.0000	91.5245	91.5245	1.8900e-003	0.0135	95.6057
Worker	0.0639	0.0417	0.5530	1.7200e-003	0.2109	1.0400e-003	0.2119	0.0561	9.5000e-004	0.0571	0.0000	161.2141	161.2141	4.3100e-003	4.2300e-003	162.5813
Total	**0.0688**	**0.2512**	**0.6171**	**2.6600e-003**	**0.2418**	**2.2800e-003**	**0.2441**	**0.0651**	**2.1300e-003**	**0.0672**	**0.0000**	**252.7386**	**252.7386**	**6.2000e-003**	**0.0178**	**258.1869**

Mitigated Construction On-Site

	ROG	NOx	CO	SO2	Fugitive PM10	Exhaust PM10	PM10 Total	Fugitive PM2.5	Exhaust PM2.5	PM2.5 Total	Bio- CO2	NBio- CO2	Total CO2	CH4	N2O	CO2e
Category	tons/yr										MT/yr					
Off-Road	0.1468	1.2878	1.2716	2.5500e-003		0.0547	0.0547		0.0523	0.0523	0.0000	216.3260	216.3260	0.0383	0.0000	217.2839
Total	**0.1468**	**1.2878**	**1.2716**	**2.5500e-003**		**0.0547**	**0.0547**		**0.0523**	**0.0523**	**0.0000**	**216.3260**	**216.3260**	**0.0383**	**0.0000**	**217.2839**

EMFAC Off-Model Adjustment Factors for Gasoline Light Duty Vehicle to Account for the SAFE Vehicle Rule Applied

3.5 Building Construction - 2024

Mitigated Construction Off-Site

	ROG	NOx	CO	SO2	Fugitive PM10	Exhaust PM10	PM10 Total	Fugitive PM2.5	Exhaust PM2.5	PM2.5 Total	Bio- CO2	NBio- CO2	Total CO2	CH4	N2O	CO2e
Category	tons/yr										MT/yr					
Hauling	0.0000	0.0000	0.0000	0.0000	0.0000	0.0000	0.0000	0.0000	0.0000	0.0000	0.0000	0.0000	0.0000	0.0000	0.0000	0.0000
Vendor	4.8800e-003	0.2095	0.0641	9.4000e-004	0.0309	1.2400e-003	0.0321	8.9400e-003	1.1800e-003	0.0101	0.0000	91.5245	91.5245	1.8900e-003	0.0135	95.6057
Worker	0.0639	0.0417	0.5530	1.7200e-003	0.2109	1.0400e-003	0.2119	0.0561	9.5000e-004	0.0571	0.0000	161.2141	161.2141	4.3100e-003	4.2300e-003	162.5813
Total	**0.0688**	**0.2512**	**0.6171**	**2.6600e-003**	**0.2418**	**2.2800e-003**	**0.2441**	**0.0651**	**2.1300e-003**	**0.0672**	**0.0000**	**252.7386**	**252.7386**	**6.2000e-003**	**0.0178**	**258.1869**

3.5 Building Construction - 2025

Unmitigated Construction On-Site

	ROG	NOx	CO	SO2	Fugitive PM10	Exhaust PM10	PM10 Total	Fugitive PM2.5	Exhaust PM2.5	PM2.5 Total	Bio- CO2	NBio- CO2	Total CO2	CH4	N2O	CO2e
Category	tons/yr										MT/yr					
Off-Road	0.0214	0.1867	0.1970	4.0000e-004		7.5800e-003	7.5800e-003		7.2400e-003	7.2400e-003	0.0000	33.7583	33.7583	5.9000e-003	0.0000	33.9058
Total	**0.0214**	**0.1867**	**0.1970**	**4.0000e-004**		**7.5800e-003**	**7.5800e-003**		**7.2400e-003**	**7.2400e-003**	**0.0000**	**33.7583**	**33.7583**	**5.9000e-003**	**0.0000**	**33.9058**

EMFAC Off-Model Adjustment Factors for Gasoline Light Duty Vehicle to Account for the SAFE Vehicle Rule Applied

3.5 Building Construction - 2025

Unmitigated Construction Off-Site

	ROG	NOx	CO	SO2	Fugitive PM10	Exhaust PM10	PM10 Total	Fugitive PM2.5	Exhaust PM2.5	PM2.5 Total	Bio- CO2	NBio- CO2	Total CO2	CH4	N2O	CO2e
Category	tons/yr										MT/yr					
Hauling	0.0000	0.0000	0.0000	0.0000	0.0000	0.0000	0.0000	0.0000	0.0000	0.0000	0.0000	0.0000	0.0000	0.0000	0.0000	0.0000
Vendor	7.4000e-004	0.0326	9.8300e-003	1.4000e-004	4.8200e-003	1.9000e-004	5.0200e-003	1.4000e-003	1.8000e-004	1.5800e-003	0.0000	14.0285	14.0285	2.9000e-004	2.0700e-003	14.6538
Worker	9.3800e-003	5.8700e-003	0.0810	2.6000e-004	0.0329	1.5000e-004	0.0331	8.7600e-003	1.4000e-004	8.9000e-003	0.0000	24.5565	24.5565	6.1000e-004	6.2000e-004	24.7560
Total	**0.0101**	**0.0384**	**0.0909**	**4.0000e-004**	**0.0377**	**3.4000e-004**	**0.0381**	**0.0102**	**3.2000e-004**	**0.0105**	**0.0000**	**38.5850**	**38.5850**	**9.0000e-004**	**2.6900e-003**	**39.4099**

Mitigated Construction On-Site

	ROG	NOx	CO	SO2	Fugitive PM10	Exhaust PM10	PM10 Total	Fugitive PM2.5	Exhaust PM2.5	PM2.5 Total	Bio- CO2	NBio- CO2	Total CO2	CH4	N2O	CO2e
Category	tons/yr										MT/yr					
Off-Road	0.0214	0.1867	0.1970	4.0000e-004		7.5800e-003	7.5800e-003		7.2400e-003	7.2400e-003	0.0000	33.7583	33.7583	5.9000e-003	0.0000	33.9058
Total	**0.0214**	**0.1867**	**0.1970**	**4.0000e-004**		**7.5800e-003**	**7.5800e-003**		**7.2400e-003**	**7.2400e-003**	**0.0000**	**33.7583**	**33.7583**	**5.9000e-003**	**0.0000**	**33.9058**

EMFAC Off-Model Adjustment Factors for Gasoline Light Duty Vehicle to Account for the SAFE Vehicle Rule Applied

3.5 Building Construction - 2025

Mitigated Construction Off-Site

	ROG	NOx	CO	SO2	Fugitive PM10	Exhaust PM10	PM10 Total	Fugitive PM2.5	Exhaust PM2.5	PM2.5 Total	Bio- CO2	NBio- CO2	Total CO2	CH4	N2O	CO2e
Category	tons/yr										MT/yr					
Hauling	0.0000	0.0000	0.0000	0.0000	0.0000	0.0000	0.0000	0.0000	0.0000	0.0000	0.0000	0.0000	0.0000	0.0000	0.0000	0.0000
Vendor	7.4000e-004	0.0326	9.8300e-003	1.4000e-004	4.8200e-003	1.9000e-004	5.0200e-003	1.4000e-003	1.8000e-004	1.5800e-003	0.0000	14.0285	14.0285	2.9000e-004	2.0700e-003	14.6538
Worker	9.3800e-003	5.8700e-003	0.0810	2.6000e-004	0.0329	1.5000e-004	0.0331	8.7600e-003	1.4000e-004	8.9000e-003	0.0000	24.5565	24.5565	6.1000e-004	6.2000e-004	24.7560
Total	**0.0101**	**0.0384**	**0.0909**	**4.0000e-004**	**0.0377**	**3.4000e-004**	**0.0381**	**0.0102**	**3.2000e-004**	**0.0105**	**0.0000**	**38.5850**	**38.5850**	**9.0000e-004**	**2.6900e-003**	**39.4099**

3.6 Paving - 2025

Unmitigated Construction On-Site

	ROG	NOx	CO	SO2	Fugitive PM10	Exhaust PM10	PM10 Total	Fugitive PM2.5	Exhaust PM2.5	PM2.5 Total	Bio- CO2	NBio- CO2	Total CO2	CH4	N2O	CO2e
Category	tons/yr										MT/yr					
Off-Road	0.0102	0.0967	0.1518	2.3000e-004		4.5500e-003	4.5500e-003		4.2000e-003	4.2000e-003	0.0000	20.1668	20.1668	6.3900e-003	0.0000	20.3266
Paving	0.0000					0.0000	0.0000		0.0000	0.0000	0.0000	0.0000	0.0000	0.0000	0.0000	0.0000
Total	**0.0102**	**0.0967**	**0.1518**	**2.3000e-004**		**4.5500e-003**	**4.5500e-003**		**4.2000e-003**	**4.2000e-003**	**0.0000**	**20.1668**	**20.1668**	**6.3900e-003**	**0.0000**	**20.3266**

EMFAC Off-Model Adjustment Factors for Gasoline Light Duty Vehicle to Account for the SAFE Vehicle Rule Applied

3.6 Paving - 2025

Unmitigated Construction Off-Site

	ROG	NOx	CO	SO2	Fugitive PM10	Exhaust PM10	PM10 Total	Fugitive PM2.5	Exhaust PM2.5	PM2.5 Total	Bio- CO2	NBio- CO2	Total CO2	CH4	N2O	CO2e
Category	tons/yr										MT/yr					
Hauling	0.0000	0.0000	0.0000	0.0000	0.0000	0.0000	0.0000	0.0000	0.0000	0.0000	0.0000	0.0000	0.0000	0.0000	0.0000	0.0000
Vendor	0.0000	0.0000	0.0000	0.0000	0.0000	0.0000	0.0000	0.0000	0.0000	0.0000	0.0000	0.0000	0.0000	0.0000	0.0000	0.0000
Worker	4.4000e-004	2.7000e-004	3.7900e-003	1.0000e-005	1.5400e-003	1.0000e-005	1.5500e-003	4.1000e-004	1.0000e-005	4.2000e-004	0.0000	1.1497	1.1497	3.0000e-005	3.0000e-005	1.1591
Total	**4.4000e-004**	**2.7000e-004**	**3.7900e-003**	**1.0000e-005**	**1.5400e-003**	**1.0000e-005**	**1.5500e-003**	**4.1000e-004**	**1.0000e-005**	**4.2000e-004**	**0.0000**	**1.1497**	**1.1497**	**3.0000e-005**	**3.0000e-005**	**1.1591**

Mitigated Construction On-Site

	ROG	NOx	CO	SO2	Fugitive PM10	Exhaust PM10	PM10 Total	Fugitive PM2.5	Exhaust PM2.5	PM2.5 Total	Bio- CO2	NBio- CO2	Total CO2	CH4	N2O	CO2e
Category	tons/yr										MT/yr					
Off-Road	0.0102	0.0967	0.1518	2.3000e-004		4.5500e-003	4.5500e-003		4.2000e-003	4.2000e-003	0.0000	20.1668	20.1668	6.3900e-003	0.0000	20.3266
Paving	0.0000					0.0000	0.0000		0.0000	0.0000	0.0000	0.0000	0.0000	0.0000	0.0000	0.0000
Total	**0.0102**	**0.0967**	**0.1518**	**2.3000e-004**		**4.5500e-003**	**4.5500e-003**		**4.2000e-003**	**4.2000e-003**	**0.0000**	**20.1668**	**20.1668**	**6.3900e-003**	**0.0000**	**20.3266**

EMFAC Off-Model Adjustment Factors for Gasoline Light Duty Vehicle to Account for the SAFE Vehicle Rule Applied

3.6 Paving - 2025

Mitigated Construction Off-Site

	ROG	NOx	CO	SO2	Fugitive PM10	Exhaust PM10	PM10 Total	Fugitive PM2.5	Exhaust PM2.5	PM2.5 Total	Bio- CO2	NBio- CO2	Total CO2	CH4	N2O	CO2e
Category	tons/yr										MT/yr					
Hauling	0.0000	0.0000	0.0000	0.0000	0.0000	0.0000	0.0000	0.0000	0.0000	0.0000	0.0000	0.0000	0.0000	0.0000	0.0000	0.0000
Vendor	0.0000	0.0000	0.0000	0.0000	0.0000	0.0000	0.0000	0.0000	0.0000	0.0000	0.0000	0.0000	0.0000	0.0000	0.0000	0.0000
Worker	4.4000e-004	2.7000e-004	3.7900e-003	1.0000e-005	1.5400e-003	1.0000e-005	1.5500e-003	4.1000e-004	1.0000e-005	4.2000e-004	0.0000	1.1497	1.1497	3.0000e-005	3.0000e-005	1.1591
Total	**4.4000e-004**	**2.7000e-004**	**3.7900e-003**	**1.0000e-005**	**1.5400e-003**	**1.0000e-005**	**1.5500e-003**	**4.1000e-004**	**1.0000e-005**	**4.2000e-004**	**0.0000**	**1.1497**	**1.1497**	**3.0000e-005**	**3.0000e-005**	**1.1591**

3.7 Architectural Coating - 2025

Unmitigated Construction On-Site

	ROG	NOx	CO	SO2	Fugitive PM10	Exhaust PM10	PM10 Total	Fugitive PM2.5	Exhaust PM2.5	PM2.5 Total	Bio- CO2	NBio- CO2	Total CO2	CH4	N2O	CO2e
Category	tons/yr										MT/yr					
Archit. Coating	0.7736					0.0000	0.0000		0.0000	0.0000	0.0000	0.0000	0.0000	0.0000	0.0000	0.0000
Off-Road	4.4400e-003	0.0298	0.0470	8.0000e-005		1.3400e-003	1.3400e-003		1.3400e-003	1.3400e-003	0.0000	6.6385	6.6385	3.6000e-004	0.0000	6.6475
Total	**0.7781**	**0.0298**	**0.0470**	**8.0000e-005**		**1.3400e-003**	**1.3400e-003**		**1.3400e-003**	**1.3400e-003**	**0.0000**	**6.6385**	**6.6385**	**3.6000e-004**	**0.0000**	**6.6475**

EMFAC Off-Model Adjustment Factors for Gasoline Light Duty Vehicle to Account for the SAFE Vehicle Rule Applied

3.7 Architectural Coating - 2025

Unmitigated Construction Off-Site

	ROG	NOx	CO	SO2	Fugitive PM10	Exhaust PM10	PM10 Total	Fugitive PM2.5	Exhaust PM2.5	PM2.5 Total	Bio- CO2	NBio- CO2	Total CO2	CH4	N2O	CO2e
Category	tons/yr										MT/yr					
Hauling	0.0000	0.0000	0.0000	0.0000	0.0000	0.0000	0.0000	0.0000	0.0000	0.0000	0.0000	0.0000	0.0000	0.0000	0.0000	0.0000
Vendor	0.0000	0.0000	0.0000	0.0000	0.0000	0.0000	0.0000	0.0000	0.0000	0.0000	0.0000	0.0000	0.0000	0.0000	0.0000	0.0000
Worker	1.9900e-003	1.2500e-003	0.0172	6.0000e-005	6.9900e-003	3.0000e-005	7.0200e-003	1.8600e-003	3.0000e-005	1.8900e-003	0.0000	5.2120	5.2120	1.3000e-004	1.3000e-004	5.2543
Total	**1.9900e-003**	**1.2500e-003**	**0.0172**	**6.0000e-005**	**6.9900e-003**	**3.0000e-005**	**7.0200e-003**	**1.8600e-003**	**3.0000e-005**	**1.8900e-003**	**0.0000**	**5.2120**	**5.2120**	**1.3000e-004**	**1.3000e-004**	**5.2543**

Mitigated Construction On-Site

	ROG	NOx	CO	SO2	Fugitive PM10	Exhaust PM10	PM10 Total	Fugitive PM2.5	Exhaust PM2.5	PM2.5 Total	Bio- CO2	NBio- CO2	Total CO2	CH4	N2O	CO2e
Category	tons/yr										MT/yr					
Archit. Coating	0.7736					0.0000	0.0000		0.0000	0.0000	0.0000	0.0000	0.0000	0.0000	0.0000	0.0000
Off-Road	4.4400e-003	0.0298	0.0470	8.0000e-005		1.3400e-003	1.3400e-003		1.3400e-003	1.3400e-003	0.0000	6.6385	6.6385	3.6000e-004	0.0000	6.6475
Total	**0.7781**	**0.0298**	**0.0470**	**8.0000e-005**		**1.3400e-003**	**1.3400e-003**		**1.3400e-003**	**1.3400e-003**	**0.0000**	**6.6385**	**6.6385**	**3.6000e-004**	**0.0000**	**6.6475**

3.7 Architectural Coating - 2025

Mitigated Construction Off-Site

	ROG	NOx	CO	SO2	Fugitive PM10	Exhaust PM10	PM10 Total	Fugitive PM2.5	Exhaust PM2.5	PM2.5 Total	Bio- CO2	NBio- CO2	Total CO2	CH4	N2O	CO2e
Category	tons/yr										MT/yr					
Hauling	0.0000	0.0000	0.0000	0.0000	0.0000	0.0000	0.0000	0.0000	0.0000	0.0000	0.0000	0.0000	0.0000	0.0000	0.0000	0.0000
Vendor	0.0000	0.0000	0.0000	0.0000	0.0000	0.0000	0.0000	0.0000	0.0000	0.0000	0.0000	0.0000	0.0000	0.0000	0.0000	0.0000
Worker	1.9900e-003	1.2500e-003	0.0172	6.0000e-005	6.9900e-003	3.0000e-005	7.0200e-003	1.8600e-003	3.0000e-005	1.8900e-003	0.0000	5.2120	5.2120	1.3000e-004	1.3000e-004	5.2543
Total	**1.9900e-003**	**1.2500e-003**	**0.0172**	**6.0000e-005**	**6.9900e-003**	**3.0000e-005**	**7.0200e-003**	**1.8600e-003**	**3.0000e-005**	**1.8900e-003**	**0.0000**	**5.2120**	**5.2120**	**1.3000e-004**	**1.3000e-004**	**5.2543**

4.0 Operational Detail - Mobile

4.1 Mitigation Measures Mobile

Increase Transit Accessibility

Integrate Below Market Rate Housing

EMFAC Off-Model Adjustment Factors for Gasoline Light Duty Vehicle to Account for the SAFE Vehicle Rule Applied

	ROG	NOx	CO	SO2	Fugitive PM10	Exhaust PM10	PM10 Total	Fugitive PM2.5	Exhaust PM2.5	PM2.5 Total	Bio- CO2	NBio- CO2	Total CO2	CH4	N2O	CO2e
Category	tons/yr										MT/yr					
Mitigated	0.4698	0.4822	4.0497	7.8600e-003	0.8618	5.9800e-003	0.8678	0.2303	5.5700e-003	0.2358	0.0000	743.5984	743.5984	0.0537	0.0380	756.2692
Unmitigated	0.5105	0.5569	4.6647	9.5400e-003	1.0542	7.1100e-003	1.0614	0.2817	6.6300e-003	0.2883	0.0000	902.7617	902.7617	0.0600	0.0438	917.3103

4.2 Trip Summary Information

	Average Daily Trip Rate			Unmitigated	Mitigated
Land Use	Weekday	Saturday	Sunday	Annual VMT	Annual VMT
Apartments Mid Rise	1,077.12	972.18	809.82	2,364,906	1,933,304
Condo/Townhouse	65.88	73.26	56.52	151,504	123,854
Enclosed Parking with Elevator	0.00	0.00	0.00		
Parking Lot	0.00	0.00	0.00		
Strip Mall	243.76	231.22	112.37	343,732	281,000
Total	1,386.76	1,276.66	978.71	2,860,142	2,338,158

4.3 Trip Type Information

	Miles			Trip %			Trip Purpose %		
Land Use	H-W or C-W	H-S or C-C	H-O or C-NW	H-W or C-W	H-S or C-C	H-O or C-NW	Primary	Diverted	Pass-by
Apartments Mid Rise	10.80	4.80	5.70	31.00	15.00	54.00	86	11	3
Condo/Townhouse	10.80	4.80	5.70	31.00	15.00	54.00	86	11	3
Enclosed Parking with Elevator	9.50	7.30	7.30	0.00	0.00	0.00	0	0	0
Parking Lot	9.50	7.30	7.30	0.00	0.00	0.00	0	0	0
Strip Mall	9.50	7.30	7.30	16.60	64.40	19.00	45	40	15

4.4 Fleet Mix

EMFAC Off-Model Adjustment Factors for Gasoline Light Duty Vehicle to Account for the SAFE Vehicle Rule Applied

Land Use	LDA	LDT1	LDT2	MDV	LHD1	LHD2	MHD	HHD	OBUS	UBUS	MCY	SBUS	MH
Apartments Mid Rise	0.553839	0.058700	0.188468	0.120786	0.022796	0.005663	0.010629	0.007566	0.000983	0.000556	0.026354	0.000841	0.002820
Condo/Townhouse	0.553839	0.058700	0.188468	0.120786	0.022796	0.005663	0.010629	0.007566	0.000983	0.000556	0.026354	0.000841	0.002820
Enclosed Parking with Elevator	0.553839	0.058700	0.188468	0.120786	0.022796	0.005663	0.010629	0.007566	0.000983	0.000556	0.026354	0.000841	0.002820
Parking Lot	0.553839	0.058700	0.188468	0.120786	0.022796	0.005663	0.010629	0.007566	0.000983	0.000556	0.026354	0.000841	0.002820
Strip Mall	0.553839	0.058700	0.188468	0.120786	0.022796	0.005663	0.010629	0.007566	0.000983	0.000556	0.026354	0.000841	0.002820

5.0 Energy Detail

Historical Energy Use: N

5.1 Mitigation Measures Energy

	ROG	NOx	CO	SO2	Fugitive PM10	Exhaust PM10	PM10 Total	Fugitive PM2.5	Exhaust PM2.5	PM2.5 Total	Bio- CO2	NBio- CO2	Total CO2	CH4	N2O	CO2e
Category	tons/yr										MT/yr					
Electricity Mitigated						0.0000	0.0000		0.0000	0.0000	0.0000	65.2897	65.2897	0.0160	1.9300e-003	66.2645
Electricity Unmitigated						0.0000	0.0000		0.0000	0.0000	0.0000	65.2897	65.2897	0.0160	1.9300e-003	66.2645
NaturalGas Mitigated	0.0102	0.0869	0.0375	5.5000e-004		7.0200e-003	7.0200e-003		7.0200e-003	7.0200e-003	0.0000	100.5513	100.5513	1.9300e-003	1.8400e-003	101.1489
NaturalGas Unmitigated	0.0102	0.0869	0.0375	5.5000e-004		7.0200e-003	7.0200e-003		7.0200e-003	7.0200e-003	0.0000	100.5513	100.5513	1.9300e-003	1.8400e-003	101.1489

EMFAC Off-Model Adjustment Factors for Gasoline Light Duty Vehicle to Account for the SAFE Vehicle Rule Applied

5.2 Energy by Land Use - NaturalGas

Unmitigated

	NaturalGas Use	ROG	NOx	CO	SO2	Fugitive PM10	Exhaust PM10	PM10 Total	Fugitive PM2.5	Exhaust PM2.5	PM2.5 Total	Bio- CO2	NBio- CO2	Total CO2	CH4	N2O	CO2e
Land Use	kBTU/yr	tons/yr										MT/yr					
Apartments Mid Rise	1.67172e+006	9.0100e-003	0.0770	0.0328	4.9000e-004		6.2300e-003	6.2300e-003		6.2300e-003	6.2300e-003	0.0000	89.2091	89.2091	1.7100e-003	1.6400e-003	89.7393
Condo/Townhouse	187465	1.0100e-003	8.6400e-003	3.6800e-003	6.0000e-005		7.0000e-004	7.0000e-004		7.0000e-004	7.0000e-004	0.0000	10.0038	10.0038	1.9000e-004	1.8000e-004	10.0633
Enclosed Parking with Elevator	0	0.0000	0.0000	0.0000	0.0000		0.0000	0.0000		0.0000	0.0000	0.0000	0.0000	0.0000	0.0000	0.0000	0.0000
Parking Lot	0	0.0000	0.0000	0.0000	0.0000		0.0000	0.0000		0.0000	0.0000	0.0000	0.0000	0.0000	0.0000	0.0000	0.0000
Strip Mall	25080	1.4000e-004	1.2300e-003	1.0300e-003	1.0000e-005		9.0000e-005	9.0000e-005		9.0000e-005	9.0000e-005	0.0000	1.3384	1.3384	3.0000e-005	2.0000e-005	1.3463
Total		**0.0102**	**0.0869**	**0.0375**	**5.6000e-004**		**7.0200e-003**	**7.0200e-003**		**7.0200e-003**	**7.0200e-003**	**0.0000**	**100.5513**	**100.5513**	**1.9300e-003**	**1.8400e-003**	**101.1489**

5.2 Energy by Land Use - NaturalGas

Mitigated

	NaturalGas Use	ROG	NOx	CO	SO2	Fugitive PM10	Exhaust PM10	PM10 Total	Fugitive PM2.5	Exhaust PM2.5	PM2.5 Total	Bio- CO2	NBio- CO2	Total CO2	CH4	N2O	CO2e
Land Use	kBTU/yr	tons/yr										MT/yr					
Apartments Mid Rise	1.67172e+006	9.0100e-003	0.0770	0.0328	4.9000e-004		6.2300e-003	6.2300e-003		6.2300e-003	6.2300e-003	0.0000	89.2091	89.2091	1.7100e-003	1.6400e-003	89.7393
Condo/Townhouse	187465	1.0100e-003	8.6400e-003	3.6800e-003	6.0000e-005		7.0000e-004	7.0000e-004		7.0000e-004	7.0000e-004	0.0000	10.0038	10.0038	1.9000e-004	1.8000e-004	10.0633
Enclosed Parking with Elevator	0	0.0000	0.0000	0.0000	0.0000		0.0000	0.0000		0.0000	0.0000	0.0000	0.0000	0.0000	0.0000	0.0000	0.0000
Parking Lot	0	0.0000	0.0000	0.0000	0.0000		0.0000	0.0000		0.0000	0.0000	0.0000	0.0000	0.0000	0.0000	0.0000	0.0000
Strip Mall	25080	1.4000e-004	1.2300e-003	1.0300e-003	1.0000e-005		9.0000e-005	9.0000e-005		9.0000e-005	9.0000e-005	0.0000	1.3384	1.3384	3.0000e-005	2.0000e-005	1.3463
Total		**0.0102**	**0.0869**	**0.0375**	**5.6000e-004**		**7.0200e-003**	**7.0200e-003**		**7.0200e-003**	**7.0200e-003**	**0.0000**	**100.5513**	**100.5513**	**1.9300e-003**	**1.8400e-003**	**101.1489**

5.3 Energy by Land Use - Electricity

Unmitigated

	Electricity Use	Total CO2	CH4	N2O	CO2e
Land Use	kWh/yr	MT/yr			
Apartments Mid Rise	769501	47.1553	0.0115	1.4000e-003	47.8593
Condo/Townhouse	43551.5	2.6689	6.5000e-004	8.0000e-005	2.7087
Enclosed Parking with Elevator	192554	11.7998	2.8800e-003	3.5000e-004	11.9760
Parking Lot	3500	0.2145	5.0000e-005	1.0000e-005	0.2177
Strip Mall	56320	3.4513	8.4000e-004	1.0000e-004	3.5028
Total		**65.2897**	**0.0159**	**1.9400e-003**	**66.2645**

5.3 Energy by Land Use - Electricity

Mitigated

	Electricity Use	Total CO2	CH4	N2O	CO2e
Land Use	kWh/yr	MT/yr			
Apartments Mid Rise	769501	47.1553	0.0115	1.4000e-003	47.8593
Condo/Townhouse	43551.5	2.6689	6.5000e-004	8.0000e-005	2.7087
Enclosed Parking with Elevator	192554	11.7998	2.8800e-003	3.5000e-004	11.9760
Parking Lot	3500	0.2145	5.0000e-005	1.0000e-005	0.2177
Strip Mall	56320	3.4513	8.4000e-004	1.0000e-004	3.5028
Total		**65.2897**	**0.0159**	**1.9400e-003**	**66.2645**

6.0 Area Detail

6.1 Mitigation Measures Area

540 San Pablo Avenue CE - Bay Area AQMD Air District, Annual

EMFAC Off-Model Adjustment Factors for Gasoline Light Duty Vehicle to Account for the SAFE Vehicle Rule Applied

	ROG	NOx	CO	SO2	Fugitive PM10	Exhaust PM10	PM10 Total	Fugitive PM2.5	Exhaust PM2.5	PM2.5 Total	Bio- CO2	NBio- CO2	Total CO2	CH4	N2O	CO2e
Category	tons/yr										MT/yr					
Mitigated	1.0900	0.0177	1.5371	8.0000e-005		8.5300e-003	8.5300e-003		8.5300e-003	8.5300e-003	0.0000	2.5137	2.5137	2.4100e-003	0.0000	2.5740
Unmitigated	1.0900	0.0177	1.5371	8.0000e-005		8.5300e-003	8.5300e-003		8.5300e-003	8.5300e-003	0.0000	2.5137	2.5137	2.4100e-003	0.0000	2.5740

6.2 Area by SubCategory

Unmitigated

	ROG	NOx	CO	SO2	Fugitive PM10	Exhaust PM10	PM10 Total	Fugitive PM2.5	Exhaust PM2.5	PM2.5 Total	Bio- CO2	NBio- CO2	Total CO2	CH4	N2O	CO2e
SubCategory	tons/yr										MT/yr					
Architectural Coating	0.0774					0.0000	0.0000		0.0000	0.0000	0.0000	0.0000	0.0000	0.0000	0.0000	0.0000
Consumer Products	0.9664					0.0000	0.0000		0.0000	0.0000	0.0000	0.0000	0.0000	0.0000	0.0000	0.0000
Hearth	0.0000	0.0000	0.0000	0.0000		0.0000	0.0000		0.0000	0.0000	0.0000	0.0000	0.0000	0.0000	0.0000	0.0000
Landscaping	0.0463	0.0177	1.5371	8.0000e-005		8.5300e-003	8.5300e-003		8.5300e-003	8.5300e-003	0.0000	2.5137	2.5137	2.4100e-003	0.0000	2.5740
Total	**1.0900**	**0.0177**	**1.5371**	**8.0000e-005**		**8.5300e-003**	**8.5300e-003**		**8.5300e-003**	**8.5300e-003**	**0.0000**	**2.5137**	**2.5137**	**2.4100e-003**	**0.0000**	**2.5740**

6.2 Area by SubCategory

Mitigated

	ROG	NOx	CO	SO2	Fugitive PM10	Exhaust PM10	PM10 Total	Fugitive PM2.5	Exhaust PM2.5	PM2.5 Total	Bio- CO2	NBio- CO2	Total CO2	CH4	N2O	CO2e
SubCategory	tons/yr										MT/yr					
Architectural Coating	0.0774					0.0000	0.0000		0.0000	0.0000	0.0000	0.0000	0.0000	0.0000	0.0000	0.0000
Consumer Products	0.9664					0.0000	0.0000		0.0000	0.0000	0.0000	0.0000	0.0000	0.0000	0.0000	0.0000
Hearth	0.0000	0.0000	0.0000	0.0000		0.0000	0.0000		0.0000	0.0000	0.0000	0.0000	0.0000	0.0000	0.0000	0.0000
Landscaping	0.0463	0.0177	1.5371	8.0000e-005		8.5300e-003	8.5300e-003		8.5300e-003	8.5300e-003	0.0000	2.5137	2.5137	2.4100e-003	0.0000	2.5740
Total	**1.0900**	**0.0177**	**1.5371**	**8.0000e-005**		**8.5300e-003**	**8.5300e-003**		**8.5300e-003**	**8.5300e-003**	**0.0000**	**2.5137**	**2.5137**	**2.4100e-003**	**0.0000**	**2.5740**

7.0 Water Detail

7.1 Mitigation Measures Water

EMFAC Off-Model Adjustment Factors for Gasoline Light Duty Vehicle to Account for the SAFE Vehicle Rule Applied

	Total CO2	CH4	N2O	CO2e
Category	MT/yr			
Mitigated	10.8924	0.4543	0.0109	25.4936
Unmitigated	10.8924	0.4543	0.0109	25.4936

7.2 Water by Land Use

Unmitigated

	Indoor/Outdoor Use	Total CO2	CH4	N2O	CO2e
Land Use	Mgal	MT/yr			
Apartments Mid Rise	12.9005 / 8.13292	10.1147	0.4218	0.0101	23.6716
Condo/Townhouse	0.586386 / 0.369678	0.4598	0.0192	4.6000e-004	1.0760
Enclosed Parking with Elevator	0 / 0	0.0000	0.0000	0.0000	0.0000
Parking Lot	0 / 0	0.0000	0.0000	0.0000	0.0000
Strip Mall	0.407399 / 0.249696	0.3179	0.0133	3.2000e-004	0.7460
Total		**10.8924**	**0.4543**	**0.0109**	**25.4936**

7.2 Water by Land Use

Mitigated

	Indoor/Outdoor Use	Total CO2	CH4	N2O	CO2e
Land Use	Mgal	MT/yr			
Apartments Mid Rise	12.9005 / 8.13292	10.1147	0.4218	0.0101	23.6716
Condo/Townhouse	0.586386 / 0.369678	0.4598	0.0192	4.6000e-004	1.0760
Enclosed Parking with Elevator	0 / 0	0.0000	0.0000	0.0000	0.0000
Parking Lot	0 / 0	0.0000	0.0000	0.0000	0.0000
Strip Mall	0.407399 / 0.249696	0.3179	0.0133	3.2000e-004	0.7460
Total		**10.8924**	**0.4543**	**0.0109**	**25.4936**

8.0 Waste Detail

8.1 Mitigation Measures Waste

EMFAC Off-Model Adjustment Factors for Gasoline Light Duty Vehicle to Account for the SAFE Vehicle Rule Applied

Category/Year

	Total CO2	CH4	N2O	CO2e
	MT/yr			
Mitigated	20.5021	1.2116	0.0000	50.7931
Unmitigated	20.5021	1.2116	0.0000	50.7931

8.2 Waste by Land Use

Unmitigated

	Waste Disposed	Total CO2	CH4	N2O	CO2e
Land Use	tons	MT/yr			
Apartments Mid Rise	91.08	18.4884	1.0926	0.0000	45.8043
Condo/Townhouse	4.14	0.8404	0.0497	0.0000	2.0820
Enclosed Parking with Elevator	0	0.0000	0.0000	0.0000	0.0000
Parking Lot	0	0.0000	0.0000	0.0000	0.0000
Strip Mall	5.78	1.1733	0.0693	0.0000	2.9068
Total		**20.5021**	**1.2116**	**0.0000**	**50.7931**

8.2 Waste by Land Use

Mitigated

	Waste Disposed	Total CO2	CH4	N2O	CO2e
Land Use	tons	MT/yr			
Apartments Mid Rise	91.08	18.4884	1.0926	0.0000	45.8043
Condo/Townhouse	4.14	0.8404	0.0497	0.0000	2.0820
Enclosed Parking with Elevator	0	0.0000	0.0000	0.0000	0.0000
Parking Lot	0	0.0000	0.0000	0.0000	0.0000
Strip Mall	5.78	1.1733	0.0693	0.0000	2.9068
Total		**20.5021**	**1.2116**	**0.0000**	**50.7931**

9.0 Operational Offroad

Equipment Type	Number	Hours/Day	Days/Year	Horse Power	Load Factor	Fuel Type

10.0 Stationary Equipment

Fire Pumps and Emergency Generators

Equipment Type	Number	Hours/Day	Hours/Year	Horse Power	Load Factor	Fuel Type

Boilers

Equipment Type	Number	Heat Input/Day	Heat Input/Year	Boiler Rating	Fuel Type

EMFAC Off-Model Adjustment Factors for Gasoline Light Duty Vehicle to Account for the SAFE Vehicle Rule Applied

User Defined Equipment

Equipment Type	Number

11.0 Vegetation

EMFAC Off-Model Adjustment Factors for Gasoline Light Duty Vehicle to Account for the SAFE Vehicle Rule Applied

540 San Pablo Avenue CE

Bay Area AQMD Air District, Summer

1.0 Project Characteristics

1.1 Land Usage

Land Uses	Size	Metric	Lot Acreage	Floor Surface Area	Population
Enclosed Parking with Elevator	137.00	Space	0.00	35,396.00	0
Parking Lot	25.00	Space	0.00	10,000.00	0
Apartments Mid Rise	198.00	Dwelling Unit	2.18	224,859.00	566
Condo/Townhouse	9.00	Dwelling Unit	0.00	16,326.00	26
Strip Mall	5.50	1000sqft	0.00	5,500.00	0

1.2 Other Project Characteristics

Urbanization	Urban	**Wind Speed (m/s)**	2.2	**Precipitation Freq (Days)**	64
Climate Zone	5			**Operational Year**	2025
Utility Company	Pacific Gas and Electric Company				
CO2 Intensity (lb/MWhr)	135.1	**CH4 Intensity (lb/MWhr)**	0.033	**N2O Intensity (lb/MWhr)**	0.004

1.3 User Entered Comments & Non-Default Data

Project Characteristics - Project is in City of Albany, under BAAQMD. Utility provider is East Bay Community Energy, used 2019 CO2 emission rate for Bright Choice.

Land Use - Project specific landuses

Construction Phase - Assume 26 days per month (working days), Based on applicant provided information

Off-road Equipment - Default CalEEMod settings

Off-road Equipment - Based on applicant provided information

Off-road Equipment - Based on applicant provided information

Off-road Equipment - Based on applicant provided information

540 San Pablo Avenue CE - Bay Area AQMD Air District, Summer

EMFAC Off-Model Adjustment Factors for Gasoline Light Duty Vehicle to Account for the SAFE Vehicle Rule Applied

Off-road Equipment - Default CalEEMod Settings

Off-road Equipment - Based on applicant provided information

Trips and VMT - Based on applicant provided information: haul truck capacities of 14 CY, and specified truck haul routes (miles)

On-road Fugitive Dust - Default on-road fugitive dust settings

Demolition - Measured square footage using Google Earth, three one-story commercial buildings

Grading - Based on applicant provided information

Architectural Coating - BAAQMD Regulation 8 Rule 3, used Flat Coating and Traffic Marking Coating

Vehicle Trips - Default trip generation rate

Woodstoves - Compliance with BAAQMD Regulation 6 Rule 3: No Fireplaces, Based on applicant provided information

Area Coating - Compliance with BAAQMD Regulation 8 Rule 3: Architectural Coating, Flat Rate and Traffic Marking Coatings

Water And Wastewater - Wastewater treatment plant is 100% aerobic, no septic tank on site or facultative lagoons on wastewater treatment plant.

Construction Off-road Equipment Mitigation - Based on applicant provided information

Mobile Land Use Mitigation - Project is 0.2 miles from a rapid bus stop. Project will construct 21 affordable housing units out of 198 residential units.

Area Mitigation -

Table Name	Column Name	Default Value	New Value
tblArchitecturalCoating	EF_Nonresidential_Exterior	150.00	50.00
tblArchitecturalCoating	EF_Nonresidential_Interior	100.00	50.00
tblArchitecturalCoating	EF_Parking	150.00	100.00
tblArchitecturalCoating	EF_Residential_Exterior	150.00	50.00
tblArchitecturalCoating	EF_Residential_Interior	100.00	50.00
tblAreaCoating	Area_EF_Nonresidential_Exterior	150	50
tblAreaCoating	Area_EF_Nonresidential_Interior	100	50
tblAreaCoating	Area_EF_Parking	150	100
tblAreaCoating	Area_EF_Residential_Exterior	150	50
tblAreaCoating	Area_EF_Residential_Interior	100	50
tblAreaMitigation	UseLowVOCPaintNonresidentialExteriorValue	50	150
tblAreaMitigation	UseLowVOCPaintNonresidentialInteriorValue	50	100

540 San Pablo Avenue CE - Bay Area AQMD Air District, Summer

EMFAC Off-Model Adjustment Factors for Gasoline Light Duty Vehicle to Account for the SAFE Vehicle Rule Applied

tblAreaMitigation	UseLowVOCPaintParkingValue	100	150
tblAreaMitigation	UseLowVOCPaintResidentialExteriorValue	50	150
tblAreaMitigation	UseLowVOCPaintResidentialInteriorValue	50	100
tblConstDustMitigation	WaterUnpavedRoadVehicleSpeed	0	15
tblConstructionPhase	NumDays	20.00	13.00
tblConstructionPhase	NumDays	3.00	13.00
tblConstructionPhase	NumDays	6.00	26.00
tblConstructionPhase	NumDays	220.00	806.00
tblConstructionPhase	NumDays	10.00	26.00
tblConstructionPhase	NumDays	10.00	52.00
tblConstructionPhase	NumDaysWeek	5.00	6.00
tblConstructionPhase	NumDaysWeek	5.00	6.00
tblConstructionPhase	NumDaysWeek	5.00	6.00
tblConstructionPhase	NumDaysWeek	5.00	6.00
tblConstructionPhase	NumDaysWeek	5.00	6.00
tblConstructionPhase	NumDaysWeek	5.00	6.00
tblFireplaces	FireplaceDayYear	11.14	0.00
tblFireplaces	FireplaceDayYear	11.14	0.00
tblFireplaces	FireplaceHourDay	3.50	0.00
tblFireplaces	FireplaceHourDay	3.50	0.00
tblFireplaces	FireplaceWoodMass	228.80	0.00
tblFireplaces	FireplaceWoodMass	228.80	0.00
tblFireplaces	NumberGas	29.70	0.00
tblFireplaces	NumberGas	1.35	0.00
tblFireplaces	NumberNoFireplace	7.92	0.00
tblFireplaces	NumberNoFireplace	0.36	0.00
tblFireplaces	NumberWood	33.66	0.00
tblFireplaces	NumberWood	1.53	0.00

EMFAC Off-Model Adjustment Factors for Gasoline Light Duty Vehicle to Account for the SAFE Vehicle Rule Applied

tblGrading	MaterialExported	0.00	6,300.00
tblGrading	MaterialExported	0.00	1,150.00
tblLandUse	LandUseSquareFeet	54,800.00	35,396.00
tblLandUse	LandUseSquareFeet	198,000.00	224,859.00
tblLandUse	LandUseSquareFeet	9,000.00	16,326.00
tblLandUse	LotAcreage	1.23	0.00
tblLandUse	LotAcreage	0.22	0.00
tblLandUse	LotAcreage	5.21	2.18
tblLandUse	LotAcreage	0.56	0.00
tblLandUse	LotAcreage	0.13	0.00
tblOffRoadEquipment	HorsePower	84.00	89.00
tblOffRoadEquipment	LoadFactor	0.74	0.20
tblOffRoadEquipment	OffRoadEquipmentUnitAmount	1.00	0.00
tblOffRoadEquipment	OffRoadEquipmentUnitAmount	2.00	1.00
tblOffRoadEquipment	OffRoadEquipmentUnitAmount	1.00	0.00
tblOffRoadEquipment	OffRoadEquipmentUnitAmount	1.00	0.00
tblOffRoadEquipment	OffRoadEquipmentUnitAmount	3.00	0.00
tblOffRoadEquipment	OffRoadEquipmentUnitAmount	1.00	2.00
tblOffRoadEquipment	OffRoadEquipmentUnitAmount	3.00	1.00
tblProjectCharacteristics	CO2IntensityFactor	203.98	135.1
tblTripsAndVMT	HaulingTripLength	20.00	8.00
tblTripsAndVMT	HaulingTripLength	20.00	8.00
tblTripsAndVMT	HaulingTripLength	20.00	15.00
tblTripsAndVMT	HaulingTripNumber	176.00	347.00
tblTripsAndVMT	HaulingTripNumber	144.00	164.00
tblTripsAndVMT	HaulingTripNumber	788.00	900.00
tblWoodstoves	NumberCatalytic	3.96	0.00
tblWoodstoves	NumberCatalytic	0.18	0.00
tblWoodstoves	NumberNoncatalytic	3.96	0.00

EMFAC Off-Model Adjustment Factors for Gasoline Light Duty Vehicle to Account for the SAFE Vehicle Rule Applied

tblWoodstoves	NumberNoncatalytic	0.18	0.00
tblWoodstoves	WoodstoveDayYear	14.12	0.00
tblWoodstoves	WoodstoveDayYear	14.12	0.00
tblWoodstoves	WoodstoveWoodMass	582.40	0.00
tblWoodstoves	WoodstoveWoodMass	582.40	0.00

2.0 Emissions Summary

2.1 Overall Construction (Maximum Daily Emission)

Unmitigated Construction

	ROG	NOx	CO	SO2	Fugitive PM10	Exhaust PM10	PM10 Total	Fugitive PM2.5	Exhaust PM2.5	PM2.5 Total	Bio- CO2	NBio- CO2	Total CO2	CH4	N2O	CO2e
Year	lb/day										lb/day					
2022	1.7441	21.4924	13.1491	0.0391	7.7696	0.7836	8.5531	3.6079	0.7223	4.3302	0.0000	3,999.9819	3,999.9819	0.7102	0.2925	4,104.9055
2023	1.4940	10.3422	12.6582	0.0344	1.5997	0.4093	2.0090	0.4289	0.3916	0.8205	0.0000	3,410.2780	3,410.2780	0.3173	0.1258	3,455.7093
2024	1.3963	9.7258	12.2890	0.0339	1.5997	0.3631	1.9628	0.4289	0.3470	0.7759	0.0000	3,369.3488	3,369.3488	0.3105	0.1223	3,413.5662
2025	30.0068	9.1167	11.9869	0.0334	1.5997	0.3508	1.9231	0.4289	0.3239	0.7377	0.0000	3,328.9148	3,328.9148	0.5442	0.1189	3,371.9487
Maximum	**30.0068**	**21.4924**	**13.1491**	**0.0391**	**7.7696**	**0.7836**	**8.5531**	**3.6079**	**0.7223**	**4.3302**	**0.0000**	**3,999.9819**	**3,999.9819**	**0.7102**	**0.2925**	**4,104.9055**

540 San Pablo Avenue CE - Bay Area AQMD Air District, Summer

EMFAC Off-Model Adjustment Factors for Gasoline Light Duty Vehicle to Account for the SAFE Vehicle Rule Applied

2.1 Overall Construction (Maximum Daily Emission)

Mitigated Construction

	ROG	NOx	CO	SO2	Fugitive PM10	Exhaust PM10	PM10 Total	Fugitive PM2.5	Exhaust PM2.5	PM2.5 Total	Bio- CO2	NBio- CO2	Total CO2	CH4	N2O	CO2e
Year	lb/day										lb/day					
2022	1.7441	21.4924	13.1491	0.0391	7.7696	0.7836	8.5531	3.6079	0.7223	4.3302	0.0000	3,999.9819	3,999.9819	0.7102	0.2925	4,104.9055
2023	1.4940	10.3422	12.6582	0.0344	1.5997	0.4093	2.0090	0.4289	0.3916	0.8205	0.0000	3,410.2780	3,410.2780	0.3173	0.1258	3,455.7093
2024	1.3963	9.7258	12.2890	0.0339	1.5997	0.3631	1.9628	0.4289	0.3470	0.7759	0.0000	3,369.3488	3,369.3488	0.3105	0.1223	3,413.5662
2025	30.0068	9.1167	11.9869	0.0334	1.5997	0.3508	1.9231	0.4289	0.3239	0.7377	0.0000	3,328.9148	3,328.9148	0.5442	0.1189	3,371.9487
Maximum	**30.0068**	**21.4924**	**13.1491**	**0.0391**	**7.7696**	**0.7836**	**8.5531**	**3.6079**	**0.7223**	**4.3302**	**0.0000**	**3,999.9819**	**3,999.9819**	**0.7102**	**0.2925**	**4,104.9055**

	ROG	NOx	CO	SO2	Fugitive PM10	Exhaust PM10	PM10 Total	Fugitive PM2.5	Exhaust PM2.5	PM2.5 Total	Bio- CO2	NBio-CO2	Total CO2	CH4	N20	CO2e
Percent Reduction	**0.00**	**0.00**	**0.00**	**0.00**	**0.00**	**0.00**	**0.00**	**0.00**	**0.00**	**0.00**	**0.00**	**0.00**	**0.00**	**0.00**	**0.00**	**0.00**

EMFAC Off-Model Adjustment Factors for Gasoline Light Duty Vehicle to Account for the SAFE Vehicle Rule Applied

2.2 Overall Operational

Unmitigated Operational

	ROG	NOx	CO	SO2	Fugitive PM10	Exhaust PM10	PM10 Total	Fugitive PM2.5	Exhaust PM2.5	PM2.5 Total	Bio- CO2	NBio- CO2	Total CO2	CH4	N2O	CO2e
Category	lb/day										lb/day					
Area	6.2329	0.1967	17.0786	9.0000e-004		0.0947	0.0947		0.0947	0.0947	0.0000	30.7870	30.7870	0.0295	0.0000	31.5255
Energy	0.0557	0.4762	0.2054	3.0400e-003		0.0385	0.0385		0.0385	0.0385		607.3362	607.3362	0.0116	0.0111	610.9453
Mobile	3.3307	2.9864	26.9310	0.0586	6.3826	0.0415	6.4241	1.7000	0.0386	1.7386		6,108.4428	6,108.4428	0.3599	0.2669	6,196.9825
Total	**9.6192**	**3.6592**	**44.2150**	**0.0625**	**6.3826**	**0.1747**	**6.5573**	**1.7000**	**0.1718**	**1.8718**	**0.0000**	**6,746.5660**	**6,746.5660**	**0.4011**	**0.2781**	**6,839.4533**

Mitigated Operational

	ROG	NOx	CO	SO2	Fugitive PM10	Exhaust PM10	PM10 Total	Fugitive PM2.5	Exhaust PM2.5	PM2.5 Total	Bio- CO2	NBio- CO2	Total CO2	CH4	N2O	CO2e
Category	lb/day										lb/day					
Area	6.2329	0.1967	17.0786	9.0000e-004		0.0947	0.0947		0.0947	0.0947	0.0000	30.7870	30.7870	0.0295	0.0000	31.5255
Energy	0.0557	0.4762	0.2054	3.0400e-003		0.0385	0.0385		0.0385	0.0385		607.3362	607.3362	0.0116	0.0111	610.9453
Mobile	3.0986	2.5852	23.1093	0.0482	5.2178	0.0349	5.2527	1.3897	0.0325	1.4222		5,029.0529	5,029.0529	0.3191	0.2314	5,105.9802
Total	**9.3871**	**3.2580**	**40.3934**	**0.0522**	**5.2178**	**0.1681**	**5.3858**	**1.3897**	**0.1657**	**1.5554**	**0.0000**	**5,667.1761**	**5,667.1761**	**0.3603**	**0.2425**	**5,748.4510**

EMFAC Off-Model Adjustment Factors for Gasoline Light Duty Vehicle to Account for the SAFE Vehicle Rule Applied

	ROG	NOx	CO	SO2	Fugitive PM10	Exhaust PM10	PM10 Total	Fugitive PM2.5	Exhaust PM2.5	PM2.5 Total	Bio- CO2	NBio-CO2	Total CO2	CH4	N20	CO2e
Percent Reduction	**2.41**	**10.96**	**8.64**	**16.55**	**18.25**	**3.78**	**17.86**	**18.25**	**3.59**	**16.90**	**0.00**	**16.00**	**16.00**	**10.16**	**12.79**	**15.95**

3.0 Construction Detail

Construction Phase

Phase Number	Phase Name	Phase Type	Start Date	End Date	Num Days Week	Num Days	Phase Description
1	Demolition	Demolition	6/1/2022	6/15/2022	6	13	
2	Site Preparation	Site Preparation	6/16/2022	6/30/2022	6	13	
3	Grading	Grading	7/2/2022	8/1/2022	6	26	
4	Building Construction	Building Construction	8/2/2022	2/26/2025	6	806	
5	Paving	Paving	2/27/2025	3/28/2025	6	26	
6	Architectural Coating	Architectural Coating	3/29/2025	5/28/2025	6	52	

Acres of Grading (Site Preparation Phase): 6.5

Acres of Grading (Grading Phase): 26

Acres of Paving: 0

Residential Indoor: 488,400; Residential Outdoor: 162,800; Non-Residential Indoor: 8,250; Non-Residential Outdoor: 2,750; Striped Parking Area: 2,724 (Architectural Coating – sqft)

OffRoad Equipment

Phase Name	Offroad Equipment Type	Amount	Usage Hours	Horse Power	Load Factor
Demolition	Air Compressors	1		78	0.48
Demolition	Concrete/Industrial Saws	0	8.00	81	0.73
Demolition	Crushing/Proc. Equipment	1		85	0.78
Demolition	Dumpers/Tenders	1		16	0.38
Demolition	Excavators	1		158	0.38

EMFAC Off-Model Adjustment Factors for Gasoline Light Duty Vehicle to Account for the SAFE Vehicle Rule Applied

Demolition	Rubber Tired Dozers	1	8.00	247	0.40
Demolition	Skid Steer Loaders	1		65	0.37
Demolition	Tractors/Loaders/Backhoes	0	8.00	97	0.37
Site Preparation	Crushing/Proc. Equipment	1		85	0.78
Site Preparation	Dumpers/Tenders	1		16	0.38
Site Preparation	Excavators	1		158	0.38
Site Preparation	Graders	1	8.00	187	0.41
Site Preparation	Plate Compactors	1		8	0.43
Site Preparation	Rubber Tired Dozers	1		247	0.40
Site Preparation	Scrapers	0	8.00	367	0.48
Site Preparation	Skid Steer Loaders	1		65	0.37
Site Preparation	Tractors/Loaders/Backhoes	2	7.00	97	0.37
Grading	Dumpers/Tenders	1		16	0.38
Grading	Excavators	1		158	0.38
Grading	Graders	1	8.00	187	0.41
Grading	Plate Compactors	1		8	0.43
Grading	Rubber Tired Dozers	1	8.00	247	0.40
Grading	Rubber Tired Loaders	0		203	0.36
Grading	Scrapers	1		367	0.48
Grading	Skid Steer Loaders	1		65	0.37
Grading	Tractors/Loaders/Backhoes	2	7.00	97	0.37
Grading	Trenchers	1		78	0.50
Building Construction	Aerial Lifts	1		63	0.31
Building Construction	Cranes	1	8.00	231	0.29
Building Construction	Excavators	1		158	0.38
Building Construction	Forklifts	1	7.00	89	0.20
Building Construction	Generator Sets	1	8.00	84	0.74
Building Construction	Pumps	1		89	0.20
Building Construction	Rough Terrain Forklifts	1		100	0.40

EMFAC Off-Model Adjustment Factors for Gasoline Light Duty Vehicle to Account for the SAFE Vehicle Rule Applied

Building Construction	Tractors/Loaders/Backhoes	0	6.00	97	0.37
Building Construction	Welders	1	8.00	46	0.45
Paving	Cement and Mortar Mixers	1	8.00	9	0.56
Paving	Pavers	1	8.00	130	0.42
Paving	Paving Equipment	1	8.00	132	0.36
Paving	Rollers	2	8.00	80	0.38
Paving	Tractors/Loaders/Backhoes	1	8.00	97	0.37
Architectural Coating	Air Compressors	1	6.00	78	0.48

Trips and VMT

Phase Name	Offroad Equipment Count	Worker Trip Number	Vendor Trip Number	Hauling Trip Number	Worker Trip Length	Vendor Trip Length	Hauling Trip Length	Worker Vehicle Class	Vendor Vehicle Class	Hauling Vehicle Class
Demolition	6	15.00	0.00	347.00	10.80	7.30	8.00	LD_Mix	HDT_Mix	HHDT
Site Preparation	9	23.00	0.00	164.00	10.80	7.30	8.00	LD_Mix	HDT_Mix	HHDT
Grading	10	25.00	0.00	900.00	10.80	7.30	15.00	LD_Mix	HDT_Mix	HHDT
Building Construction	8	170.00	30.00	0.00	10.80	7.30	20.00	LD_Mix	HDT_Mix	HHDT
Paving	6	15.00	0.00	0.00	10.80	7.30	20.00	LD_Mix	HDT_Mix	HHDT
Architectural Coating	1	34.00	0.00	0.00	10.80	7.30	20.00	LD_Mix	HDT_Mix	HHDT

3.1 Mitigation Measures Construction

Water Exposed Area

EMFAC Off-Model Adjustment Factors for Gasoline Light Duty Vehicle to Account for the SAFE Vehicle Rule Applied

3.2 Demolition - 2022

Unmitigated Construction On-Site

	ROG	NOx	CO	SO2	Fugitive PM10	Exhaust PM10	PM10 Total	Fugitive PM2.5	Exhaust PM2.5	PM2.5 Total	Bio- CO2	NBio- CO2	Total CO2	CH4	N2O	CO2e
Category	lb/day										lb/day					
Fugitive Dust					2.9250	0.0000	2.9250	0.4429	0.0000	0.4429			0.0000			0.0000
Off-Road	0.8371	8.7937	3.5820	8.5300e-003		0.4174	0.4174		0.3840	0.3840		827.0354	827.0354	0.2675		833.7224
Total	**0.8371**	**8.7937**	**3.5820**	**8.5300e-003**	**2.9250**	**0.4174**	**3.3423**	**0.4429**	**0.3840**	**0.8269**		**827.0354**	**827.0354**	**0.2675**		**833.7224**

Unmitigated Construction Off-Site

	ROG	NOx	CO	SO2	Fugitive PM10	Exhaust PM10	PM10 Total	Fugitive PM2.5	Exhaust PM2.5	PM2.5 Total	Bio- CO2	NBio- CO2	Total CO2	CH4	N2O	CO2e
Category	lb/day										lb/day					
Hauling	0.0665	2.0593	0.5957	7.1900e-003	0.1871	0.0167	0.2038	0.0513	0.0160	0.0673		781.7836	781.7836	0.0254	0.1238	819.3114
Vendor	0.0000	0.0000	0.0000	0.0000	0.0000	0.0000	0.0000	0.0000	0.0000	0.0000		0.0000	0.0000	0.0000	0.0000	0.0000
Worker	0.0436	0.0263	0.3878	1.1000e-003	0.1232	6.4000e-004	0.1239	0.0327	5.9000e-004	0.0333		112.2095	112.2095	3.0600e-003	2.8000e-003	113.1197
Total	**0.1101**	**2.0857**	**0.9835**	**8.2900e-003**	**0.3103**	**0.0174**	**0.3277**	**0.0840**	**0.0166**	**0.1006**		**893.9931**	**893.9931**	**0.0285**	**0.1266**	**932.4311**

EMFAC Off-Model Adjustment Factors for Gasoline Light Duty Vehicle to Account for the SAFE Vehicle Rule Applied

3.2 Demolition - 2022

Mitigated Construction On-Site

	ROG	NOx	CO	SO2	Fugitive PM10	Exhaust PM10	PM10 Total	Fugitive PM2.5	Exhaust PM2.5	PM2.5 Total	Bio- CO2	NBio- CO2	Total CO2	CH4	N2O	CO2e
Category	lb/day										lb/day					
Fugitive Dust					2.9250	0.0000	2.9250	0.4429	0.0000	0.4429			0.0000			0.0000
Off-Road	0.8371	8.7937	3.5820	8.5300e-003		0.4174	0.4174		0.3840	0.3840	0.0000	827.0354	827.0354	0.2675		833.7224
Total	**0.8371**	**8.7937**	**3.5820**	**8.5300e-003**	**2.9250**	**0.4174**	**3.3423**	**0.4429**	**0.3840**	**0.8269**	**0.0000**	**827.0354**	**827.0354**	**0.2675**		**833.7224**

Mitigated Construction Off-Site

	ROG	NOx	CO	SO2	Fugitive PM10	Exhaust PM10	PM10 Total	Fugitive PM2.5	Exhaust PM2.5	PM2.5 Total	Bio- CO2	NBio- CO2	Total CO2	CH4	N2O	CO2e
Category	lb/day										lb/day					
Hauling	0.0665	2.0593	0.5957	7.1900e-003	0.1871	0.0167	0.2038	0.0513	0.0160	0.0673		781.7836	781.7836	0.0254	0.1238	819.3114
Vendor	0.0000	0.0000	0.0000	0.0000	0.0000	0.0000	0.0000	0.0000	0.0000	0.0000		0.0000	0.0000	0.0000	0.0000	0.0000
Worker	0.0436	0.0263	0.3878	1.1000e-003	0.1232	6.4000e-004	0.1239	0.0327	5.9000e-004	0.0333		112.2095	112.2095	3.0600e-003	2.8000e-003	113.1197
Total	**0.1101**	**2.0857**	**0.9835**	**8.2900e-003**	**0.3103**	**0.0174**	**0.3277**	**0.0840**	**0.0166**	**0.1006**		**893.9931**	**893.9931**	**0.0285**	**0.1266**	**932.4311**

540 San Pablo Avenue CE - Bay Area AQMD Air District, Summer

EMFAC Off-Model Adjustment Factors for Gasoline Light Duty Vehicle to Account for the SAFE Vehicle Rule Applied

3.3 Site Preparation - 2022

Unmitigated Construction On-Site

	ROG	NOx	CO	SO2	Fugitive PM10	Exhaust PM10	PM10 Total	Fugitive PM2.5	Exhaust PM2.5	PM2.5 Total	Bio- CO2	NBio- CO2	Total CO2	CH4	N2O	CO2e
Category	lb/day										lb/day					
Fugitive Dust					0.5403	0.0000	0.5403	0.0588	0.0000	0.0588			0.0000			0.0000
Off-Road	0.7032	8.1900	5.6382	0.0121		0.3249	0.3249		0.2989	0.2989		1,168.4471	1,168.4471	0.3779		1,177.8946
Total	**0.7032**	**8.1900**	**5.6382**	**0.0121**	**0.5403**	**0.3249**	**0.8652**	**0.0588**	**0.2989**	**0.3577**		**1,168.4471**	**1,168.4471**	**0.3779**		**1,177.8946**

Unmitigated Construction Off-Site

	ROG	NOx	CO	SO2	Fugitive PM10	Exhaust PM10	PM10 Total	Fugitive PM2.5	Exhaust PM2.5	PM2.5 Total	Bio- CO2	NBio- CO2	Total CO2	CH4	N2O	CO2e
Category	lb/day										lb/day					
Hauling	0.0314	0.9733	0.2815	3.4000e-003	0.0884	7.9000e-003	0.0963	0.0243	7.5600e-003	0.0318		369.4885	369.4885	0.0120	0.0585	387.2250
Vendor	0.0000	0.0000	0.0000	0.0000	0.0000	0.0000	0.0000	0.0000	0.0000	0.0000		0.0000	0.0000	0.0000	0.0000	0.0000
Worker	0.0669	0.0403	0.5946	1.6900e-003	0.1889	9.9000e-004	0.1899	0.0501	9.1000e-004	0.0510		172.0545	172.0545	4.6900e-003	4.2900e-003	173.4502
Total	**0.0983**	**1.0136**	**0.8761**	**5.0900e-003**	**0.2774**	**8.8900e-003**	**0.2862**	**0.0744**	**8.4700e-003**	**0.0828**		**541.5430**	**541.5430**	**0.0167**	**0.0628**	**560.6752**

540 San Pablo Avenue CE - Bay Area AQMD Air District, Summer

EMFAC Off-Model Adjustment Factors for Gasoline Light Duty Vehicle to Account for the SAFE Vehicle Rule Applied

3.3 Site Preparation - 2022

Mitigated Construction On-Site

	ROG	NOx	CO	SO2	Fugitive PM10	Exhaust PM10	PM10 Total	Fugitive PM2.5	Exhaust PM2.5	PM2.5 Total	Bio- CO2	NBio- CO2	Total CO2	CH4	N2O	CO2e
Category	lb/day										lb/day					
Fugitive Dust					0.5403	0.0000	0.5403	0.0588	0.0000	0.0588			0.0000			0.0000
Off-Road	0.7032	8.1900	5.6382	0.0121		0.3249	0.3249		0.2989	0.2989	0.0000	1,168.4471	1,168.4471	0.3779		1,177.8946
Total	**0.7032**	**8.1900**	**5.6382**	**0.0121**	**0.5403**	**0.3249**	**0.8652**	**0.0588**	**0.2989**	**0.3577**	**0.0000**	**1,168.4471**	**1,168.4471**	**0.3779**		**1,177.8946**

Mitigated Construction Off-Site

	ROG	NOx	CO	SO2	Fugitive PM10	Exhaust PM10	PM10 Total	Fugitive PM2.5	Exhaust PM2.5	PM2.5 Total	Bio- CO2	NBio- CO2	Total CO2	CH4	N2O	CO2e
Category	lb/day										lb/day					
Hauling	0.0314	0.9733	0.2815	3.4000e-003	0.0884	7.9000e-003	0.0963	0.0243	7.5600e-003	0.0318		369.4885	369.4885	0.0120	0.0585	387.2250
Vendor	0.0000	0.0000	0.0000	0.0000	0.0000	0.0000	0.0000	0.0000	0.0000	0.0000		0.0000	0.0000	0.0000	0.0000	0.0000
Worker	0.0669	0.0403	0.5946	1.6900e-003	0.1889	9.9000e-004	0.1899	0.0501	9.1000e-004	0.0510		172.0545	172.0545	4.6900e-003	4.2900e-003	173.4502
Total	**0.0983**	**1.0136**	**0.8761**	**5.0900e-003**	**0.2774**	**8.8900e-003**	**0.2862**	**0.0744**	**8.4700e-003**	**0.0828**		**541.5430**	**541.5430**	**0.0167**	**0.0628**	**560.6752**

EMFAC Off-Model Adjustment Factors for Gasoline Light Duty Vehicle to Account for the SAFE Vehicle Rule Applied

3.4 Grading - 2022

Unmitigated Construction On-Site

	ROG	NOx	CO	SO2	Fugitive PM10	Exhaust PM10	PM10 Total	Fugitive PM2.5	Exhaust PM2.5	PM2.5 Total	Bio- CO2	NBio- CO2	Total CO2	CH4	N2O	CO2e
Category	lb/day										lb/day					
Fugitive Dust					7.1100	0.0000	7.1100	3.4289	0.0000	3.4289			0.0000			0.0000
Off-Road	1.5403	16.9836	9.2202	0.0206		0.7423	0.7423		0.6829	0.6829		1,995.4825	1,995.4825	0.6454		2,011.6169
Total	**1.5403**	**16.9836**	**9.2202**	**0.0206**	**7.1100**	**0.7423**	**7.8523**	**3.4289**	**0.6829**	**4.1118**		**1,995.4825**	**1,995.4825**	**0.6454**		**2,011.6169**

Unmitigated Construction Off-Site

	ROG	NOx	CO	SO2	Fugitive PM10	Exhaust PM10	PM10 Total	Fugitive PM2.5	Exhaust PM2.5	PM2.5 Total	Bio- CO2	NBio- CO2	Total CO2	CH4	N2O	CO2e
Category	lb/day										lb/day					
Hauling	0.1310	4.4650	1.0566	0.0167	0.4542	0.0402	0.4944	0.1245	0.0385	0.1630		1,817.4837	1,817.4837	0.0598	0.2879	1,904.7557
Vendor	0.0000	0.0000	0.0000	0.0000	0.0000	0.0000	0.0000	0.0000	0.0000	0.0000		0.0000	0.0000	0.0000	0.0000	0.0000
Worker	0.0727	0.0439	0.6463	1.8400e-003	0.2054	1.0700e-003	0.2064	0.0545	9.9000e-004	0.0555		187.0157	187.0157	5.1000e-003	4.6600e-003	188.5329
Total	**0.2037**	**4.5088**	**1.7029**	**0.0185**	**0.6596**	**0.0413**	**0.7009**	**0.1790**	**0.0395**	**0.2184**		**2,004.4995**	**2,004.4995**	**0.0649**	**0.2925**	**2,093.2886**

EMFAC Off-Model Adjustment Factors for Gasoline Light Duty Vehicle to Account for the SAFE Vehicle Rule Applied

3.4 Grading - 2022

Mitigated Construction On-Site

	ROG	NOx	CO	SO2	Fugitive PM10	Exhaust PM10	PM10 Total	Fugitive PM2.5	Exhaust PM2.5	PM2.5 Total	Bio- CO2	NBio- CO2	Total CO2	CH4	N2O	CO2e
Category	lb/day										lb/day					
Fugitive Dust					7.1100	0.0000	7.1100	3.4289	0.0000	3.4289			0.0000			0.0000
Off-Road	1.5403	16.9836	9.2202	0.0206		0.7423	0.7423		0.6829	0.6829	0.0000	1,995.4825	1,995.4825	0.6454		2,011.6169
Total	**1.5403**	**16.9836**	**9.2202**	**0.0206**	**7.1100**	**0.7423**	**7.8523**	**3.4289**	**0.6829**	**4.1118**	**0.0000**	**1,995.4825**	**1,995.4825**	**0.6454**		**2,011.6169**

Mitigated Construction Off-Site

	ROG	NOx	CO	SO2	Fugitive PM10	Exhaust PM10	PM10 Total	Fugitive PM2.5	Exhaust PM2.5	PM2.5 Total	Bio- CO2	NBio- CO2	Total CO2	CH4	N2O	CO2e
Category	lb/day										lb/day					
Hauling	0.1310	4.4650	1.0566	0.0167	0.4542	0.0402	0.4944	0.1245	0.0385	0.1630		1,817.4837	1,817.4837	0.0598	0.2879	1,904.7557
Vendor	0.0000	0.0000	0.0000	0.0000	0.0000	0.0000	0.0000	0.0000	0.0000	0.0000		0.0000	0.0000	0.0000	0.0000	0.0000
Worker	0.0727	0.0439	0.6463	1.8400e-003	0.2054	1.0700e-003	0.2064	0.0545	9.9000e-004	0.0555		187.0157	187.0157	5.1000e-003	4.6600e-003	188.5329
Total	**0.2037**	**4.5088**	**1.7029**	**0.0185**	**0.6596**	**0.0413**	**0.7009**	**0.1790**	**0.0395**	**0.2184**		**2,004.4995**	**2,004.4995**	**0.0649**	**0.2925**	**2,093.2886**

540 San Pablo Avenue CE - Bay Area AQMD Air District, Summer

EMFAC Off-Model Adjustment Factors for Gasoline Light Duty Vehicle to Account for the SAFE Vehicle Rule Applied

3.5 Building Construction - 2022

Unmitigated Construction On-Site

	ROG	NOx	CO	SO2	Fugitive PM10	Exhaust PM10	PM10 Total	Fugitive PM2.5	Exhaust PM2.5	PM2.5 Total	Bio- CO2	NBio- CO2	Total CO2	CH4	N2O	CO2e
Category	lb/day										lb/day					
Off-Road	1.0791	9.4985	8.2736	0.0162		0.4457	0.4457		0.4269	0.4269		1,518.8696	1,518.8696	0.2771		1,525.7960
Total	**1.0791**	**9.4985**	**8.2736**	**0.0162**		**0.4457**	**0.4457**		**0.4269**	**0.4269**		**1,518.8696**	**1,518.8696**	**0.2771**		**1,525.7960**

Unmitigated Construction Off-Site

	ROG	NOx	CO	SO2	Fugitive PM10	Exhaust PM10	PM10 Total	Fugitive PM2.5	Exhaust PM2.5	PM2.5 Total	Bio- CO2	NBio- CO2	Total CO2	CH4	N2O	CO2e
Category	lb/day										lb/day					
Hauling	0.0000	0.0000	0.0000	0.0000	0.0000	0.0000	0.0000	0.0000	0.0000	0.0000		0.0000	0.0000	0.0000	0.0000	0.0000
Vendor	0.0647	1.6183	0.4807	6.3500e-003	0.2032	0.0172	0.2204	0.0585	0.0165	0.0750		680.9575	680.9575	0.0148	0.1009	711.3964
Worker	0.4945	0.2982	4.3948	0.0125	1.3965	7.3000e-003	1.4038	0.3704	6.7200e-003	0.3771		1,271.7070	1,271.7070	0.0347	0.0317	1,282.0234
Total	**0.5593**	**1.9165**	**4.8754**	**0.0189**	**1.5997**	**0.0245**	**1.6242**	**0.4289**	**0.0232**	**0.4521**		**1,952.6646**	**1,952.6646**	**0.0495**	**0.1326**	**1,993.4198**

EMFAC Off-Model Adjustment Factors for Gasoline Light Duty Vehicle to Account for the SAFE Vehicle Rule Applied

3.5 Building Construction - 2022

Mitigated Construction On-Site

	ROG	NOx	CO	SO2	Fugitive PM10	Exhaust PM10	PM10 Total	Fugitive PM2.5	Exhaust PM2.5	PM2.5 Total	Bio- CO2	NBio- CO2	Total CO2	CH4	N2O	CO2e
Category	lb/day										lb/day					
Off-Road	1.0791	9.4985	8.2736	0.0162		0.4457	0.4457		0.4269	0.4269	0.0000	1,518.8696	1,518.8696	0.2771		1,525.7960
Total	**1.0791**	**9.4985**	**8.2736**	**0.0162**		**0.4457**	**0.4457**		**0.4269**	**0.4269**	**0.0000**	**1,518.8696**	**1,518.8696**	**0.2771**		**1,525.7960**

Mitigated Construction Off-Site

	ROG	NOx	CO	SO2	Fugitive PM10	Exhaust PM10	PM10 Total	Fugitive PM2.5	Exhaust PM2.5	PM2.5 Total	Bio- CO2	NBio- CO2	Total CO2	CH4	N2O	CO2e
Category	lb/day										lb/day					
Hauling	0.0000	0.0000	0.0000	0.0000	0.0000	0.0000	0.0000	0.0000	0.0000	0.0000		0.0000	0.0000	0.0000	0.0000	0.0000
Vendor	0.0647	1.6183	0.4807	6.3500e-003	0.2032	0.0172	0.2204	0.0585	0.0165	0.0750		680.9575	680.9575	0.0148	0.1009	711.3964
Worker	0.4945	0.2982	4.3948	0.0125	1.3965	7.3000e-003	1.4038	0.3704	6.7200e-003	0.3771		1,271.7070	1,271.7070	0.0347	0.0317	1,282.0234
Total	**0.5593**	**1.9165**	**4.8754**	**0.0189**	**1.5997**	**0.0245**	**1.6242**	**0.4289**	**0.0232**	**0.4521**		**1,952.6646**	**1,952.6646**	**0.0495**	**0.1326**	**1,993.4198**

EMFAC Off-Model Adjustment Factors for Gasoline Light Duty Vehicle to Account for the SAFE Vehicle Rule Applied

3.5 Building Construction - 2023

Unmitigated Construction On-Site

	ROG	NOx	CO	SO2	Fugitive PM10	Exhaust PM10	PM10 Total	Fugitive PM2.5	Exhaust PM2.5	PM2.5 Total	Bio- CO2	NBio- CO2	Total CO2	CH4	N2O	CO2e
Category	lb/day										lb/day					
Off-Road	1.0015	8.7914	8.1834	0.0162		0.3946	0.3946		0.3777	0.3777		1,518.8585	1,518.8585	0.2727		1,525.6752
Total	**1.0015**	**8.7914**	**8.1834**	**0.0162**		**0.3946**	**0.3946**		**0.3777**	**0.3777**		**1,518.8585**	**1,518.8585**	**0.2727**		**1,525.6752**

Unmitigated Construction Off-Site

	ROG	NOx	CO	SO2	Fugitive PM10	Exhaust PM10	PM10 Total	Fugitive PM2.5	Exhaust PM2.5	PM2.5 Total	Bio- CO2	NBio- CO2	Total CO2	CH4	N2O	CO2e
Category	lb/day										lb/day					
Hauling	0.0000	0.0000	0.0000	0.0000	0.0000	0.0000	0.0000	0.0000	0.0000	0.0000		0.0000	0.0000	0.0000	0.0000	0.0000
Vendor	0.0326	1.2867	0.4109	6.0800e-003	0.2032	7.7900e-003	0.2110	0.0585	7.4500e-003	0.0659		652.3831	652.3831	0.0134	0.0964	681.4568
Worker	0.4598	0.2641	4.0639	0.0121	1.3965	6.9300e-003	1.4034	0.3704	6.3800e-003	0.3768		1,239.0364	1,239.0364	0.0313	0.0294	1,248.5773
Total	**0.4925**	**1.5509**	**4.4748**	**0.0182**	**1.5997**	**0.0147**	**1.6144**	**0.4289**	**0.0138**	**0.4427**		**1,891.4195**	**1,891.4195**	**0.0446**	**0.1258**	**1,930.0341**

EMFAC Off-Model Adjustment Factors for Gasoline Light Duty Vehicle to Account for the SAFE Vehicle Rule Applied

3.5 Building Construction - 2023

Mitigated Construction On-Site

	ROG	NOx	CO	SO2	Fugitive PM10	Exhaust PM10	PM10 Total	Fugitive PM2.5	Exhaust PM2.5	PM2.5 Total	Bio- CO2	NBio- CO2	Total CO2	CH4	N2O	CO2e
Category	lb/day										lb/day					
Off-Road	1.0015	8.7914	8.1834	0.0162		0.3946	0.3946		0.3777	0.3777	0.0000	1,518.8585	1,518.8585	0.2727		1,525.6752
Total	**1.0015**	**8.7914**	**8.1834**	**0.0162**		**0.3946**	**0.3946**		**0.3777**	**0.3777**	**0.0000**	**1,518.8585**	**1,518.8585**	**0.2727**		**1,525.6752**

Mitigated Construction Off-Site

	ROG	NOx	CO	SO2	Fugitive PM10	Exhaust PM10	PM10 Total	Fugitive PM2.5	Exhaust PM2.5	PM2.5 Total	Bio- CO2	NBio- CO2	Total CO2	CH4	N2O	CO2e
Category	lb/day										lb/day					
Hauling	0.0000	0.0000	0.0000	0.0000	0.0000	0.0000	0.0000	0.0000	0.0000	0.0000		0.0000	0.0000	0.0000	0.0000	0.0000
Vendor	0.0326	1.2867	0.4109	6.0800e-003	0.2032	7.7900e-003	0.2110	0.0585	7.4500e-003	0.0659		652.3831	652.3831	0.0134	0.0964	681.4568
Worker	0.4598	0.2641	4.0639	0.0121	1.3965	6.9300e-003	1.4034	0.3704	6.3800e-003	0.3768		1,239.0364	1,239.0364	0.0313	0.0294	1,248.5773
Total	**0.4925**	**1.5509**	**4.4748**	**0.0182**	**1.5997**	**0.0147**	**1.6144**	**0.4289**	**0.0138**	**0.4427**		**1,891.4195**	**1,891.4195**	**0.0446**	**0.1258**	**1,930.0341**

EMFAC Off-Model Adjustment Factors for Gasoline Light Duty Vehicle to Account for the SAFE Vehicle Rule Applied

3.5 Building Construction - 2024

Unmitigated Construction On-Site

	ROG	NOx	CO	SO2	Fugitive PM10	Exhaust PM10	PM10 Total	Fugitive PM2.5	Exhaust PM2.5	PM2.5 Total	Bio- CO2	NBio- CO2	Total CO2	CH4	N2O	CO2e
Category	lb/day										lb/day					
Off-Road	0.9351	8.2027	8.0992	0.0162		0.3486	0.3486		0.3334	0.3334		1,518.8466	1,518.8466	0.2690		1,525.5719
Total	**0.9351**	**8.2027**	**8.0992**	**0.0162**		**0.3486**	**0.3486**		**0.3334**	**0.3334**		**1,518.8466**	**1,518.8466**	**0.2690**		**1,525.5719**

Unmitigated Construction Off-Site

	ROG	NOx	CO	SO2	Fugitive PM10	Exhaust PM10	PM10 Total	Fugitive PM2.5	Exhaust PM2.5	PM2.5 Total	Bio- CO2	NBio- CO2	Total CO2	CH4	N2O	CO2e
Category	lb/day										lb/day					
Hauling	0.0000	0.0000	0.0000	0.0000	0.0000	0.0000	0.0000	0.0000	0.0000	0.0000		0.0000	0.0000	0.0000	0.0000	0.0000
Vendor	0.0317	1.2873	0.4022	5.9800e-003	0.2032	7.8600e-003	0.2110	0.0585	7.5200e-003	0.0660		642.2082	642.2082	0.0133	0.0949	670.8284
Worker	0.4295	0.2359	3.7877	0.0117	1.3965	6.6000e-003	1.4031	0.3704	6.0700e-003	0.3765		1,208.2939	1,208.2939	0.0283	0.0274	1,217.1660
Total	**0.4613**	**1.5232**	**4.1898**	**0.0177**	**1.5997**	**0.0145**	**1.6141**	**0.4289**	**0.0136**	**0.4425**		**1,850.5021**	**1,850.5021**	**0.0415**	**0.1223**	**1,887.9943**

EMFAC Off-Model Adjustment Factors for Gasoline Light Duty Vehicle to Account for the SAFE Vehicle Rule Applied

3.5 Building Construction - 2024

Mitigated Construction On-Site

	ROG	NOx	CO	SO2	Fugitive PM10	Exhaust PM10	PM10 Total	Fugitive PM2.5	Exhaust PM2.5	PM2.5 Total	Bio- CO2	NBio- CO2	Total CO2	CH4	N2O	CO2e
Category	lb/day										lb/day					
Off-Road	0.9351	8.2027	8.0992	0.0162		0.3486	0.3486		0.3334	0.3334	0.0000	1,518.8466	1,518.8466	0.2690		1,525.5719
Total	**0.9351**	**8.2027**	**8.0992**	**0.0162**		**0.3486**	**0.3486**		**0.3334**	**0.3334**	**0.0000**	**1,518.8466**	**1,518.8466**	**0.2690**		**1,525.5719**

Mitigated Construction Off-Site

	ROG	NOx	CO	SO2	Fugitive PM10	Exhaust PM10	PM10 Total	Fugitive PM2.5	Exhaust PM2.5	PM2.5 Total	Bio- CO2	NBio- CO2	Total CO2	CH4	N2O	CO2e
Category	lb/day										lb/day					
Hauling	0.0000	0.0000	0.0000	0.0000	0.0000	0.0000	0.0000	0.0000	0.0000	0.0000		0.0000	0.0000	0.0000	0.0000	0.0000
Vendor	0.0317	1.2873	0.4022	5.9800e-003	0.2032	7.8600e-003	0.2110	0.0585	7.5200e-003	0.0660		642.2082	642.2082	0.0133	0.0949	670.8284
Worker	0.4295	0.2359	3.7877	0.0117	1.3965	6.6000e-003	1.4031	0.3704	6.0700e-003	0.3765		1,208.2939	1,208.2939	0.0283	0.0274	1,217.1660
Total	**0.4613**	**1.5232**	**4.1898**	**0.0177**	**1.5997**	**0.0145**	**1.6141**	**0.4289**	**0.0136**	**0.4425**		**1,850.5021**	**1,850.5021**	**0.0415**	**0.1223**	**1,887.9943**

540 San Pablo Avenue CE - Bay Area AQMD Air District, Summer

EMFAC Off-Model Adjustment Factors for Gasoline Light Duty Vehicle to Account for the SAFE Vehicle Rule Applied

3.5 Building Construction - 2025

Unmitigated Construction On-Site

	ROG	NOx	CO	SO2	Fugitive PM10	Exhaust PM10	PM10 Total	Fugitive PM2.5	Exhaust PM2.5	PM2.5 Total	Bio- CO2	NBio- CO2	Total CO2	CH4	N2O	CO2e
Category	lb/day										lb/day					
Off-Road	0.8750	7.6217	8.0396	0.0162		0.3093	0.3093		0.2954	0.2954		1,518.8655	1,518.8655	0.2654		1,525.4996
Total	**0.8750**	**7.6217**	**8.0396**	**0.0162**		**0.3093**	**0.3093**		**0.2954**	**0.2954**		**1,518.8655**	**1,518.8655**	**0.2654**		**1,525.4996**

Unmitigated Construction Off-Site

	ROG	NOx	CO	SO2	Fugitive PM10	Exhaust PM10	PM10 Total	Fugitive PM2.5	Exhaust PM2.5	PM2.5 Total	Bio- CO2	NBio- CO2	Total CO2	CH4	N2O	CO2e
Category	lb/day										lb/day					
Hauling	0.0000	0.0000	0.0000	0.0000	0.0000	0.0000	0.0000	0.0000	0.0000	0.0000		0.0000	0.0000	0.0000	0.0000	0.0000
Vendor	0.0309	1.2825	0.3950	5.8800e-003	0.2032	7.8500e-003	0.2111	0.0585	7.5100e-003	0.0660		630.7790	630.7790	0.0132	0.0932	658.8825
Worker	0.4035	0.2125	3.5498	0.0113	1.3965	6.3100e-003	1.4028	0.3704	5.8100e-003	0.3762		1,179.2703	1,179.2703	0.0256	0.0257	1,187.5666
Total	**0.4344**	**1.4950**	**3.9448**	**0.0172**	**1.5997**	**0.0142**	**1.6139**	**0.4289**	**0.0133**	**0.4422**		**1,810.0493**	**1,810.0493**	**0.0388**	**0.1189**	**1,846.4491**

540 San Pablo Avenue CE - Bay Area AQMD Air District, Summer

EMFAC Off-Model Adjustment Factors for Gasoline Light Duty Vehicle to Account for the SAFE Vehicle Rule Applied

3.5 Building Construction - 2025

Mitigated Construction On-Site

	ROG	NOx	CO	SO2	Fugitive PM10	Exhaust PM10	PM10 Total	Fugitive PM2.5	Exhaust PM2.5	PM2.5 Total	Bio- CO2	NBio- CO2	Total CO2	CH4	N2O	CO2e
Category	lb/day										lb/day					
Off-Road	0.8750	7.6217	8.0396	0.0162		0.3093	0.3093		0.2954	0.2954	0.0000	1,518.8655	1,518.8655	0.2654		1,525.4996
Total	**0.8750**	**7.6217**	**8.0396**	**0.0162**		**0.3093**	**0.3093**		**0.2954**	**0.2954**	**0.0000**	**1,518.8655**	**1,518.8655**	**0.2654**		**1,525.4996**

Mitigated Construction Off-Site

	ROG	NOx	CO	SO2	Fugitive PM10	Exhaust PM10	PM10 Total	Fugitive PM2.5	Exhaust PM2.5	PM2.5 Total	Bio- CO2	NBio- CO2	Total CO2	CH4	N2O	CO2e
Category	lb/day										lb/day					
Hauling	0.0000	0.0000	0.0000	0.0000	0.0000	0.0000	0.0000	0.0000	0.0000	0.0000		0.0000	0.0000	0.0000	0.0000	0.0000
Vendor	0.0309	1.2825	0.3950	5.8800e-003	0.2032	7.8500e-003	0.2111	0.0585	7.5100e-003	0.0660		630.7790	630.7790	0.0132	0.0932	658.8825
Worker	0.4035	0.2125	3.5498	0.0113	1.3965	6.3100e-003	1.4028	0.3704	5.8100e-003	0.3762		1,179.2703	1,179.2703	0.0256	0.0257	1,187.5666
Total	**0.4344**	**1.4950**	**3.9448**	**0.0172**	**1.5997**	**0.0142**	**1.6139**	**0.4289**	**0.0133**	**0.4422**		**1,810.0493**	**1,810.0493**	**0.0388**	**0.1189**	**1,846.4491**

540 San Pablo Avenue CE - Bay Area AQMD Air District, Summer

EMFAC Off-Model Adjustment Factors for Gasoline Light Duty Vehicle to Account for the SAFE Vehicle Rule Applied

3.6 Paving - 2025

Unmitigated Construction On-Site

	ROG	NOx	CO	SO2	Fugitive PM10	Exhaust PM10	PM10 Total	Fugitive PM2.5	Exhaust PM2.5	PM2.5 Total	Bio- CO2	NBio- CO2	Total CO2	CH4	N2O	CO2e
Category	lb/day										lb/day					
Off-Road	0.7854	7.4371	11.6737	0.0179		0.3503	0.3503		0.3234	0.3234		1,710.0067	1,710.0067	0.5420		1,723.5556
Paving	0.0000					0.0000	0.0000		0.0000	0.0000			0.0000			0.0000
Total	**0.7854**	**7.4371**	**11.6737**	**0.0179**		**0.3503**	**0.3503**		**0.3234**	**0.3234**		**1,710.0067**	**1,710.0067**	**0.5420**		**1,723.5556**

Unmitigated Construction Off-Site

	ROG	NOx	CO	SO2	Fugitive PM10	Exhaust PM10	PM10 Total	Fugitive PM2.5	Exhaust PM2.5	PM2.5 Total	Bio- CO2	NBio- CO2	Total CO2	CH4	N2O	CO2e
Category	lb/day										lb/day					
Hauling	0.0000	0.0000	0.0000	0.0000	0.0000	0.0000	0.0000	0.0000	0.0000	0.0000		0.0000	0.0000	0.0000	0.0000	0.0000
Vendor	0.0000	0.0000	0.0000	0.0000	0.0000	0.0000	0.0000	0.0000	0.0000	0.0000		0.0000	0.0000	0.0000	0.0000	0.0000
Worker	0.0356	0.0188	0.3132	1.0000e-003	0.1232	5.6000e-004	0.1238	0.0327	5.1000e-004	0.0332		104.0533	104.0533	2.2600e-003	2.2700e-003	104.7853
Total	**0.0356**	**0.0188**	**0.3132**	**1.0000e-003**	**0.1232**	**5.6000e-004**	**0.1238**	**0.0327**	**5.1000e-004**	**0.0332**		**104.0533**	**104.0533**	**2.2600e-003**	**2.2700e-003**	**104.7853**

540 San Pablo Avenue CE - Bay Area AQMD Air District, Summer

EMFAC Off-Model Adjustment Factors for Gasoline Light Duty Vehicle to Account for the SAFE Vehicle Rule Applied

3.6 Paving - 2025

Mitigated Construction On-Site

	ROG	NOx	CO	SO2	Fugitive PM10	Exhaust PM10	PM10 Total	Fugitive PM2.5	Exhaust PM2.5	PM2.5 Total	Bio- CO2	NBio- CO2	Total CO2	CH4	N2O	CO2e
Category	lb/day										lb/day					
Off-Road	0.7854	7.4371	11.6737	0.0179		0.3503	0.3503		0.3234	0.3234	0.0000	1,710.0067	1,710.0067	0.5420		1,723.5556
Paving	0.0000					0.0000	0.0000		0.0000	0.0000			0.0000			0.0000
Total	**0.7854**	**7.4371**	**11.6737**	**0.0179**		**0.3503**	**0.3503**		**0.3234**	**0.3234**	**0.0000**	**1,710.0067**	**1,710.0067**	**0.5420**		**1,723.5556**

Mitigated Construction Off-Site

	ROG	NOx	CO	SO2	Fugitive PM10	Exhaust PM10	PM10 Total	Fugitive PM2.5	Exhaust PM2.5	PM2.5 Total	Bio- CO2	NBio- CO2	Total CO2	CH4	N2O	CO2e
Category	lb/day										lb/day					
Hauling	0.0000	0.0000	0.0000	0.0000	0.0000	0.0000	0.0000	0.0000	0.0000	0.0000		0.0000	0.0000	0.0000	0.0000	0.0000
Vendor	0.0000	0.0000	0.0000	0.0000	0.0000	0.0000	0.0000	0.0000	0.0000	0.0000		0.0000	0.0000	0.0000	0.0000	0.0000
Worker	0.0356	0.0188	0.3132	1.0000e-003	0.1232	5.6000e-004	0.1238	0.0327	5.1000e-004	0.0332		104.0533	104.0533	2.2600e-003	2.2700e-003	104.7853
Total	**0.0356**	**0.0188**	**0.3132**	**1.0000e-003**	**0.1232**	**5.6000e-004**	**0.1238**	**0.0327**	**5.1000e-004**	**0.0332**		**104.0533**	**104.0533**	**2.2600e-003**	**2.2700e-003**	**104.7853**

EMFAC Off-Model Adjustment Factors for Gasoline Light Duty Vehicle to Account for the SAFE Vehicle Rule Applied

3.7 Architectural Coating - 2025

Unmitigated Construction On-Site

	ROG	NOx	CO	SO2	Fugitive PM10	Exhaust PM10	PM10 Total	Fugitive PM2.5	Exhaust PM2.5	PM2.5 Total	Bio- CO2	NBio- CO2	Total CO2	CH4	N2O	CO2e
Category	lb/day										lb/day					
Archit. Coating	29.7553					0.0000	0.0000		0.0000	0.0000			0.0000			0.0000
Off-Road	0.1709	1.1455	1.8091	2.9700e-003		0.0515	0.0515		0.0515	0.0515		281.4481	281.4481	0.0154		281.8319
Total	**29.9261**	**1.1455**	**1.8091**	**2.9700e-003**		**0.0515**	**0.0515**		**0.0515**	**0.0515**		**281.4481**	**281.4481**	**0.0154**		**281.8319**

Unmitigated Construction Off-Site

	ROG	NOx	CO	SO2	Fugitive PM10	Exhaust PM10	PM10 Total	Fugitive PM2.5	Exhaust PM2.5	PM2.5 Total	Bio- CO2	NBio- CO2	Total CO2	CH4	N2O	CO2e
Category	lb/day										lb/day					
Hauling	0.0000	0.0000	0.0000	0.0000	0.0000	0.0000	0.0000	0.0000	0.0000	0.0000		0.0000	0.0000	0.0000	0.0000	0.0000
Vendor	0.0000	0.0000	0.0000	0.0000	0.0000	0.0000	0.0000	0.0000	0.0000	0.0000		0.0000	0.0000	0.0000	0.0000	0.0000
Worker	0.0807	0.0425	0.7100	2.2600e-003	0.2793	1.2600e-003	0.2806	0.0741	1.1600e-003	0.0753		235.8541	235.8541	5.1200e-003	5.1400e-003	237.5133
Total	**0.0807**	**0.0425**	**0.7100**	**2.2600e-003**	**0.2793**	**1.2600e-003**	**0.2806**	**0.0741**	**1.1600e-003**	**0.0753**		**235.8541**	**235.8541**	**5.1200e-003**	**5.1400e-003**	**237.5133**

EMFAC Off-Model Adjustment Factors for Gasoline Light Duty Vehicle to Account for the SAFE Vehicle Rule Applied

3.7 Architectural Coating - 2025

Mitigated Construction On-Site

	ROG	NOx	CO	SO2	Fugitive PM10	Exhaust PM10	PM10 Total	Fugitive PM2.5	Exhaust PM2.5	PM2.5 Total	Bio- CO2	NBio- CO2	Total CO2	CH4	N2O	CO2e
Category	lb/day										lb/day					
Archit. Coating	29.7553					0.0000	0.0000		0.0000	0.0000			0.0000			0.0000
Off-Road	0.1709	1.1455	1.8091	2.9700e-003		0.0515	0.0515		0.0515	0.0515	0.0000	281.4481	281.4481	0.0154		281.8319
Total	**29.9261**	**1.1455**	**1.8091**	**2.9700e-003**		**0.0515**	**0.0515**		**0.0515**	**0.0515**	**0.0000**	**281.4481**	**281.4481**	**0.0154**		**281.8319**

Mitigated Construction Off-Site

	ROG	NOx	CO	SO2	Fugitive PM10	Exhaust PM10	PM10 Total	Fugitive PM2.5	Exhaust PM2.5	PM2.5 Total	Bio- CO2	NBio- CO2	Total CO2	CH4	N2O	CO2e
Category	lb/day										lb/day					
Hauling	0.0000	0.0000	0.0000	0.0000	0.0000	0.0000	0.0000	0.0000	0.0000	0.0000		0.0000	0.0000	0.0000	0.0000	0.0000
Vendor	0.0000	0.0000	0.0000	0.0000	0.0000	0.0000	0.0000	0.0000	0.0000	0.0000		0.0000	0.0000	0.0000	0.0000	0.0000
Worker	0.0807	0.0425	0.7100	2.2600e-003	0.2793	1.2600e-003	0.2806	0.0741	1.1600e-003	0.0753		235.8541	235.8541	5.1200e-003	5.1400e-003	237.5133
Total	**0.0807**	**0.0425**	**0.7100**	**2.2600e-003**	**0.2793**	**1.2600e-003**	**0.2806**	**0.0741**	**1.1600e-003**	**0.0753**		**235.8541**	**235.8541**	**5.1200e-003**	**5.1400e-003**	**237.5133**

EMFAC Off-Model Adjustment Factors for Gasoline Light Duty Vehicle to Account for the SAFE Vehicle Rule Applied

4.0 Operational Detail - Mobile

4.1 Mitigation Measures Mobile

Increase Transit Accessibility

Integrate Below Market Rate Housing

	ROG	NOx	CO	SO2	Fugitive PM10	Exhaust PM10	PM10 Total	Fugitive PM2.5	Exhaust PM2.5	PM2.5 Total	Bio- CO2	NBio- CO2	Total CO2	CH4	N2O	CO2e
Category	lb/day										lb/day					
Mitigated	3.0986	2.5852	23.1093	0.0482	5.2178	0.0349	5.2527	1.3897	0.0325	1.4222		5,029.0529	5,029.0529	0.3191	0.2314	5,105.9802
Unmitigated	3.3307	2.9864	26.9310	0.0586	6.3826	0.0415	6.4241	1.7000	0.0386	1.7386		6,108.4428	6,108.4428	0.3599	0.2669	6,196.9825

4.2 Trip Summary Information

	Average Daily Trip Rate			Unmitigated	Mitigated
Land Use	Weekday	Saturday	Sunday	Annual VMT	Annual VMT
Apartments Mid Rise	1,077.12	972.18	809.82	2,364,906	1,933,304
Condo/Townhouse	65.88	73.26	56.52	151,504	123,854
Enclosed Parking with Elevator	0.00	0.00	0.00		
Parking Lot	0.00	0.00	0.00		
Strip Mall	243.76	231.22	112.37	343,732	281,000
Total	1,386.76	1,276.66	978.71	2,860,142	2,338,158

4.3 Trip Type Information

EMFAC Off-Model Adjustment Factors for Gasoline Light Duty Vehicle to Account for the SAFE Vehicle Rule Applied

	Miles			Trip %			Trip Purpose %		
Land Use	H-W or C-W	H-S or C-C	H-O or C-NW	H-W or C-W	H-S or C-C	H-O or C-NW	Primary	Diverted	Pass-by
Apartments Mid Rise	10.80	4.80	5.70	31.00	15.00	54.00	86	11	3
Condo/Townhouse	10.80	4.80	5.70	31.00	15.00	54.00	86	11	3
Enclosed Parking with Elevator	9.50	7.30	7.30	0.00	0.00	0.00	0	0	0
Parking Lot	9.50	7.30	7.30	0.00	0.00	0.00	0	0	0
Strip Mall	9.50	7.30	7.30	16.60	64.40	19.00	45	40	15

4.4 Fleet Mix

Land Use	LDA	LDT1	LDT2	MDV	LHD1	LHD2	MHD	HHD	OBUS	UBUS	MCY	SBUS	MH
Apartments Mid Rise	0.553839	0.058700	0.188468	0.120786	0.022796	0.005663	0.010629	0.007566	0.000983	0.000556	0.026354	0.000841	0.002820
Condo/Townhouse	0.553839	0.058700	0.188468	0.120786	0.022796	0.005663	0.010629	0.007566	0.000983	0.000556	0.026354	0.000841	0.002820
Enclosed Parking with Elevator	0.553839	0.058700	0.188468	0.120786	0.022796	0.005663	0.010629	0.007566	0.000983	0.000556	0.026354	0.000841	0.002820
Parking Lot	0.553839	0.058700	0.188468	0.120786	0.022796	0.005663	0.010629	0.007566	0.000983	0.000556	0.026354	0.000841	0.002820
Strip Mall	0.553839	0.058700	0.188468	0.120786	0.022796	0.005663	0.010629	0.007566	0.000983	0.000556	0.026354	0.000841	0.002820

5.0 Energy Detail

Historical Energy Use: N

5.1 Mitigation Measures Energy

EMFAC Off-Model Adjustment Factors for Gasoline Light Duty Vehicle to Account for the SAFE Vehicle Rule Applied

	ROG	NOx	CO	SO2	Fugitive PM10	Exhaust PM10	PM10 Total	Fugitive PM2.5	Exhaust PM2.5	PM2.5 Total	Bio- CO2	NBio- CO2	Total CO2	CH4	N2O	CO2e
Category	lb/day										lb/day					
NaturalGas Mitigated	0.0557	0.4762	0.2054	3.0400e-003		0.0385	0.0385		0.0385	0.0385		607.3362	607.3362	0.0116	0.0111	610.9453
NaturalGas Unmitigated	0.0557	0.4762	0.2054	3.0400e-003		0.0385	0.0385		0.0385	0.0385		607.3362	607.3362	0.0116	0.0111	610.9453

5.2 Energy by Land Use - NaturalGas

Unmitigated

	NaturalGas Use	ROG	NOx	CO	SO2	Fugitive PM10	Exhaust PM10	PM10 Total	Fugitive PM2.5	Exhaust PM2.5	PM2.5 Total	Bio- CO2	NBio- CO2	Total CO2	CH4	N2O	CO2e
Land Use	kBTU/yr	lb/day										lb/day					
Apartments Mid Rise	4580.04	0.0494	0.4221	0.1796	2.6900e-003		0.0341	0.0341		0.0341	0.0341		538.8287	538.8287	0.0103	9.8800e-003	542.0307
Condo/Townhouse	513.602	5.5400e-003	0.0473	0.0201	3.0000e-004		3.8300e-003	3.8300e-003		3.8300e-003	3.8300e-003		60.4237	60.4237	1.1600e-003	1.1100e-003	60.7828
Enclosed Parking with Elevator	0	0.0000	0.0000	0.0000	0.0000		0.0000	0.0000		0.0000	0.0000		0.0000	0.0000	0.0000	0.0000	0.0000
Parking Lot	0	0.0000	0.0000	0.0000	0.0000		0.0000	0.0000		0.0000	0.0000		0.0000	0.0000	0.0000	0.0000	0.0000
Strip Mall	68.7123	7.4000e-004	6.7400e-003	5.6600e-003	4.0000e-005		5.1000e-004	5.1000e-004		5.1000e-004	5.1000e-004		8.0838	8.0838	1.5000e-004	1.5000e-004	8.1318
Total		**0.0557**	**0.4762**	**0.2054**	**3.0300e-003**		**0.0385**	**0.0385**		**0.0385**	**0.0385**		**607.3362**	**607.3362**	**0.0116**	**0.0111**	**610.9453**

EMFAC Off-Model Adjustment Factors for Gasoline Light Duty Vehicle to Account for the SAFE Vehicle Rule Applied

5.2 Energy by Land Use - NaturalGas

Mitigated

	NaturalGas Use	ROG	NOx	CO	SO2	Fugitive PM10	Exhaust PM10	PM10 Total	Fugitive PM2.5	Exhaust PM2.5	PM2.5 Total	Bio- CO2	NBio- CO2	Total CO2	CH4	N2O	CO2e
Land Use	kBTU/yr	lb/day										lb/day					
Apartments Mid Rise	4.58004	0.0494	0.4221	0.1796	2.6900e-003		0.0341	0.0341		0.0341	0.0341		538.8287	538.8287	0.0103	9.8800e-003	542.0307
Condo/Townhouse	0.513602	5.5400e-003	0.0473	0.0201	3.0000e-004		3.8300e-003	3.8300e-003		3.8300e-003	3.8300e-003		60.4237	60.4237	1.1600e-003	1.1100e-003	60.7828
Enclosed Parking with Elevator	0	0.0000	0.0000	0.0000	0.0000		0.0000	0.0000		0.0000	0.0000		0.0000	0.0000	0.0000	0.0000	0.0000
Parking Lot	0	0.0000	0.0000	0.0000	0.0000		0.0000	0.0000		0.0000	0.0000		0.0000	0.0000	0.0000	0.0000	0.0000
Strip Mall	0.0687123	7.4000e-004	6.7400e-003	5.6600e-003	4.0000e-005		5.1000e-004	5.1000e-004		5.1000e-004	5.1000e-004		8.0838	8.0838	1.5000e-004	1.5000e-004	8.1318
Total		**0.0557**	**0.4762**	**0.2054**	**3.0300e-003**		**0.0385**	**0.0385**		**0.0385**	**0.0385**		**607.3362**	**607.3362**	**0.0116**	**0.0111**	**610.9453**

6.0 Area Detail

6.1 Mitigation Measures Area

540 San Pablo Avenue CE - Bay Area AQMD Air District, Summer

EMFAC Off-Model Adjustment Factors for Gasoline Light Duty Vehicle to Account for the SAFE Vehicle Rule Applied

	ROG	NOx	CO	SO2	Fugitive PM10	Exhaust PM10	PM10 Total	Fugitive PM2.5	Exhaust PM2.5	PM2.5 Total	Bio- CO2	NBio- CO2	Total CO2	CH4	N2O	CO2e
Category	lb/day										lb/day					
Mitigated	6.2329	0.1967	17.0786	9.0000e-004		0.0947	0.0947		0.0947	0.0947	0.0000	30.7870	30.7870	0.0295	0.0000	31.5255
Unmitigated	6.2329	0.1967	17.0786	9.0000e-004		0.0947	0.0947		0.0947	0.0947	0.0000	30.7870	30.7870	0.0295	0.0000	31.5255

6.2 Area by SubCategory

Unmitigated

	ROG	NOx	CO	SO2	Fugitive PM10	Exhaust PM10	PM10 Total	Fugitive PM2.5	Exhaust PM2.5	PM2.5 Total	Bio- CO2	NBio- CO2	Total CO2	CH4	N2O	CO2e
SubCategory	lb/day										lb/day					
Architectural Coating	0.4239					0.0000	0.0000		0.0000	0.0000			0.0000			0.0000
Consumer Products	5.2951					0.0000	0.0000		0.0000	0.0000			0.0000			0.0000
Hearth	0.0000	0.0000	0.0000	0.0000		0.0000	0.0000		0.0000	0.0000	0.0000	0.0000	0.0000	0.0000	0.0000	0.0000
Landscaping	0.5138	0.1967	17.0786	9.0000e-004		0.0947	0.0947		0.0947	0.0947		30.7870	30.7870	0.0295		31.5255
Total	**6.2329**	**0.1967**	**17.0786**	**9.0000e-004**		**0.0947**	**0.0947**		**0.0947**	**0.0947**	**0.0000**	**30.7870**	**30.7870**	**0.0295**	**0.0000**	**31.5255**

EMFAC Off-Model Adjustment Factors for Gasoline Light Duty Vehicle to Account for the SAFE Vehicle Rule Applied

6.2 Area by SubCategory

Mitigated

	ROG	NOx	CO	SO2	Fugitive PM10	Exhaust PM10	PM10 Total	Fugitive PM2.5	Exhaust PM2.5	PM2.5 Total	Bio- CO2	NBio- CO2	Total CO2	CH4	N2O	CO2e
SubCategory	lb/day										lb/day					
Architectural Coating	0.4239					0.0000	0.0000		0.0000	0.0000			0.0000			0.0000
Consumer Products	5.2951					0.0000	0.0000		0.0000	0.0000			0.0000			0.0000
Hearth	0.0000	0.0000	0.0000	0.0000		0.0000	0.0000		0.0000	0.0000	0.0000	0.0000	0.0000	0.0000	0.0000	0.0000
Landscaping	0.5138	0.1967	17.0786	9.0000e-004		0.0947	0.0947		0.0947	0.0947		30.7870	30.7870	0.0295		31.5255
Total	**6.2329**	**0.1967**	**17.0786**	**9.0000e-004**		**0.0947**	**0.0947**		**0.0947**	**0.0947**	**0.0000**	**30.7870**	**30.7870**	**0.0295**	**0.0000**	**31.5255**

7.0 Water Detail

7.1 Mitigation Measures Water

EMFAC Off-Model Adjustment Factors for Gasoline Light Duty Vehicle to Account for the SAFE Vehicle Rule Applied

8.0 Waste Detail

8.1 Mitigation Measures Waste

9.0 Operational Offroad

Equipment Type	Number	Hours/Day	Days/Year	Horse Power	Load Factor	Fuel Type

10.0 Stationary Equipment

Fire Pumps and Emergency Generators

Equipment Type	Number	Hours/Day	Hours/Year	Horse Power	Load Factor	Fuel Type

Boilers

Equipment Type	Number	Heat Input/Day	Heat Input/Year	Boiler Rating	Fuel Type

User Defined Equipment

Equipment Type	Number

11.0 Vegetation

EMFAC Off-Model Adjustment Factors for Gasoline Light Duty Vehicle to Account for the SAFE Vehicle Rule Applied

540 San Pablo Avenue CE

Bay Area AQMD Air District, Winter

1.0 Project Characteristics

1.1 Land Usage

Land Uses	Size	Metric	Lot Acreage	Floor Surface Area	Population
Enclosed Parking with Elevator	137.00	Space	0.00	35,396.00	0
Parking Lot	25.00	Space	0.00	10,000.00	0
Apartments Mid Rise	198.00	Dwelling Unit	2.18	224,859.00	566
Condo/Townhouse	9.00	Dwelling Unit	0.00	16,326.00	26
Strip Mall	5.50	1000sqft	0.00	5,500.00	0

1.2 Other Project Characteristics

Urbanization	Urban	**Wind Speed (m/s)**	2.2	**Precipitation Freq (Days)**	64
Climate Zone	5			**Operational Year**	2025
Utility Company	Pacific Gas and Electric Company				
CO2 Intensity (lb/MWhr)	135.1	**CH4 Intensity (lb/MWhr)**	0.033	**N2O Intensity (lb/MWhr)**	0.004

1.3 User Entered Comments & Non-Default Data

Project Characteristics - Project is in City of Albany, under BAAQMD. Utility provider is East Bay Community Energy, used 2019 CO2 emission rate for Bright Choice.

Land Use - Project specific landuses

Construction Phase - Assume 26 days per month (working days), Based on applicant provided information

Off-road Equipment - Default CalEEMod settings

Off-road Equipment - Based on applicant provided information

Off-road Equipment - Based on applicant provided information

Off-road Equipment - Based on applicant provided information

540 San Pablo Avenue CE - Bay Area AQMD Air District, Winter

EMFAC Off-Model Adjustment Factors for Gasoline Light Duty Vehicle to Account for the SAFE Vehicle Rule Applied

Off-road Equipment - Default CalEEMod Settings

Off-road Equipment - Based on applicant provided information

Trips and VMT - Based on applicant provided information: haul truck capacities of 14 CY, and specified truck haul routes (miles)

On-road Fugitive Dust - Default on-road fugitive dust settings

Demolition - Measured square footage using Google Earth, three one-story commercial buildings

Grading - Based on applicant provided information

Architectural Coating - BAAQMD Regulation 8 Rule 3, used Flat Coating and Traffic Marking Coating

Vehicle Trips - Default trip generation rate

Woodstoves - Compliance with BAAQMD Regulation 6 Rule 3: No Fireplaces, Based on applicant provided information

Area Coating - Compliance with BAAQMD Regulation 8 Rule 3: Architectural Coating, Flat Rate and Traffic Marking Coatings

Water And Wastewater - Wastewater treatment plant is 100% aerobic, no septic tank on site or facultative lagoons on wastewater treatment plant.

Construction Off-road Equipment Mitigation - Based on applicant provided information

Mobile Land Use Mitigation - Project is 0.2 miles from a rapid bus stop. Project will construct 21 affordable housing units out of 198 residential units.

Area Mitigation -

Table Name	Column Name	Default Value	New Value
tblArchitecturalCoating	EF_Nonresidential_Exterior	150.00	50.00
tblArchitecturalCoating	EF_Nonresidential_Interior	100.00	50.00
tblArchitecturalCoating	EF_Parking	150.00	100.00
tblArchitecturalCoating	EF_Residential_Exterior	150.00	50.00
tblArchitecturalCoating	EF_Residential_Interior	100.00	50.00
tblAreaCoating	Area_EF_Nonresidential_Exterior	150	50
tblAreaCoating	Area_EF_Nonresidential_Interior	100	50
tblAreaCoating	Area_EF_Parking	150	100
tblAreaCoating	Area_EF_Residential_Exterior	150	50
tblAreaCoating	Area_EF_Residential_Interior	100	50
tblAreaMitigation	UseLowVOCPaintNonresidentialExteriorValue	50	150
tblAreaMitigation	UseLowVOCPaintNonresidentialInteriorValue	50	100

540 San Pablo Avenue CE - Bay Area AQMD Air District, Winter

EMFAC Off-Model Adjustment Factors for Gasoline Light Duty Vehicle to Account for the SAFE Vehicle Rule Applied

tblAreaMitigation	UseLowVOCPaintParkingValue	100	150
tblAreaMitigation	UseLowVOCPaintResidentialExteriorValue	50	150
tblAreaMitigation	UseLowVOCPaintResidentialInteriorValue	50	100
tblConstDustMitigation	WaterUnpavedRoadVehicleSpeed	0	15
tblConstructionPhase	NumDays	20.00	13.00
tblConstructionPhase	NumDays	3.00	13.00
tblConstructionPhase	NumDays	6.00	26.00
tblConstructionPhase	NumDays	220.00	806.00
tblConstructionPhase	NumDays	10.00	26.00
tblConstructionPhase	NumDays	10.00	52.00
tblConstructionPhase	NumDaysWeek	5.00	6.00
tblConstructionPhase	NumDaysWeek	5.00	6.00
tblConstructionPhase	NumDaysWeek	5.00	6.00
tblConstructionPhase	NumDaysWeek	5.00	6.00
tblConstructionPhase	NumDaysWeek	5.00	6.00
tblConstructionPhase	NumDaysWeek	5.00	6.00
tblFireplaces	FireplaceDayYear	11.14	0.00
tblFireplaces	FireplaceDayYear	11.14	0.00
tblFireplaces	FireplaceHourDay	3.50	0.00
tblFireplaces	FireplaceHourDay	3.50	0.00
tblFireplaces	FireplaceWoodMass	228.80	0.00
tblFireplaces	FireplaceWoodMass	228.80	0.00
tblFireplaces	NumberGas	29.70	0.00
tblFireplaces	NumberGas	1.35	0.00
tblFireplaces	NumberNoFireplace	7.92	0.00
tblFireplaces	NumberNoFireplace	0.36	0.00
tblFireplaces	NumberWood	33.66	0.00
tblFireplaces	NumberWood	1.53	0.00

EMFAC Off-Model Adjustment Factors for Gasoline Light Duty Vehicle to Account for the SAFE Vehicle Rule Applied

tblGrading	MaterialExported	0.00	6,300.00
tblGrading	MaterialExported	0.00	1,150.00
tblLandUse	LandUseSquareFeet	54,800.00	35,396.00
tblLandUse	LandUseSquareFeet	198,000.00	224,859.00
tblLandUse	LandUseSquareFeet	9,000.00	16,326.00
tblLandUse	LotAcreage	1.23	0.00
tblLandUse	LotAcreage	0.22	0.00
tblLandUse	LotAcreage	5.21	2.18
tblLandUse	LotAcreage	0.56	0.00
tblLandUse	LotAcreage	0.13	0.00
tblOffRoadEquipment	HorsePower	84.00	89.00
tblOffRoadEquipment	LoadFactor	0.74	0.20
tblOffRoadEquipment	OffRoadEquipmentUnitAmount	1.00	0.00
tblOffRoadEquipment	OffRoadEquipmentUnitAmount	2.00	1.00
tblOffRoadEquipment	OffRoadEquipmentUnitAmount	1.00	0.00
tblOffRoadEquipment	OffRoadEquipmentUnitAmount	1.00	0.00
tblOffRoadEquipment	OffRoadEquipmentUnitAmount	3.00	0.00
tblOffRoadEquipment	OffRoadEquipmentUnitAmount	1.00	2.00
tblOffRoadEquipment	OffRoadEquipmentUnitAmount	3.00	1.00
tblProjectCharacteristics	CO2IntensityFactor	203.98	135.1
tblTripsAndVMT	HaulingTripLength	20.00	8.00
tblTripsAndVMT	HaulingTripLength	20.00	8.00
tblTripsAndVMT	HaulingTripLength	20.00	15.00
tblTripsAndVMT	HaulingTripNumber	176.00	347.00
tblTripsAndVMT	HaulingTripNumber	144.00	164.00
tblTripsAndVMT	HaulingTripNumber	788.00	900.00
tblWoodstoves	NumberCatalytic	3.96	0.00
tblWoodstoves	NumberCatalytic	0.18	0.00
tblWoodstoves	NumberNoncatalytic	3.96	0.00

EMFAC Off-Model Adjustment Factors for Gasoline Light Duty Vehicle to Account for the SAFE Vehicle Rule Applied

tblWoodstoves	NumberNoncatalytic	0.18	0.00
tblWoodstoves	WoodstoveDayYear	14.12	0.00
tblWoodstoves	WoodstoveDayYear	14.12	0.00
tblWoodstoves	WoodstoveWoodMass	582.40	0.00
tblWoodstoves	WoodstoveWoodMass	582.40	0.00

2.0 Emissions Summary

2.1 Overall Construction (Maximum Daily Emission)

Unmitigated Construction

	ROG	NOx	CO	SO2	Fugitive PM10	Exhaust PM10	PM10 Total	Fugitive PM2.5	Exhaust PM2.5	PM2.5 Total	Bio- CO2	NBio- CO2	Total CO2	CH4	N2O	CO2e
Year	lb/day										lb/day					
2022	1.7419	21.7490	12.9629	0.0390	7.7696	0.7836	8.5532	3.6079	0.7224	4.3303	0.0000	3,987.4711	3,987.4711	0.7107	0.2934	4,092.6587
2023	1.5046	10.4789	12.5006	0.0336	1.5997	0.4094	2.0091	0.4289	0.3916	0.8205	0.0000	3,323.3859	3,323.3859	0.3215	0.1305	3,370.3184
2024	1.4079	9.8558	12.1557	0.0331	1.5997	0.3631	1.9628	0.4289	0.3470	0.7759	0.0000	3,284.8233	3,284.8233	0.3144	0.1267	3,330.4378
2025	30.0095	9.2408	11.9756	0.0326	1.5997	0.3508	1.9232	0.4289	0.3239	0.7377	0.0000	3,246.5967	3,246.5967	0.5446	0.1230	3,290.9381
Maximum	**30.0095**	**21.7490**	**12.9629**	**0.0390**	**7.7696**	**0.7836**	**8.5532**	**3.6079**	**0.7224**	**4.3303**	**0.0000**	**3,987.4711**	**3,987.4711**	**0.7107**	**0.2934**	**4,092.6587**

540 San Pablo Avenue CE - Bay Area AQMD Air District, Winter

EMFAC Off-Model Adjustment Factors for Gasoline Light Duty Vehicle to Account for the SAFE Vehicle Rule Applied

2.1 Overall Construction (Maximum Daily Emission)

Mitigated Construction

	ROG	NOx	CO	SO2	Fugitive PM10	Exhaust PM10	PM10 Total	Fugitive PM2.5	Exhaust PM2.5	PM2.5 Total	Bio- CO2	NBio- CO2	Total CO2	CH4	N2O	CO2e
Year	lb/day										lb/day					
2022	1.7419	21.7490	12.9629	0.0390	7.7696	0.7836	8.5532	3.6079	0.7224	4.3303	0.0000	3,987.4711	3,987.4711	0.7107	0.2934	4,092.6587
2023	1.5046	10.4789	12.5006	0.0336	1.5997	0.4094	2.0091	0.4289	0.3916	0.8205	0.0000	3,323.3859	3,323.3859	0.3215	0.1305	3,370.3184
2024	1.4079	9.8558	12.1557	0.0331	1.5997	0.3631	1.9628	0.4289	0.3470	0.7759	0.0000	3,284.8233	3,284.8233	0.3144	0.1267	3,330.4378
2025	30.0095	9.2408	11.9756	0.0326	1.5997	0.3508	1.9232	0.4289	0.3239	0.7377	0.0000	3,246.5967	3,246.5967	0.5446	0.1230	3,290.9381
Maximum	**30.0095**	**21.7490**	**12.9629**	**0.0390**	**7.7696**	**0.7836**	**8.5532**	**3.6079**	**0.7224**	**4.3303**	**0.0000**	**3,987.4711**	**3,987.4711**	**0.7107**	**0.2934**	**4,092.6587**

	ROG	NOx	CO	SO2	Fugitive PM10	Exhaust PM10	PM10 Total	Fugitive PM2.5	Exhaust PM2.5	PM2.5 Total	Bio- CO2	NBio-CO2	Total CO2	CH4	N20	CO2e
Percent Reduction	**0.00**	**0.00**	**0.00**	**0.00**	**0.00**	**0.00**	**0.00**	**0.00**	**0.00**	**0.00**	**0.00**	**0.00**	**0.00**	**0.00**	**0.00**	**0.00**

EMFAC Off-Model Adjustment Factors for Gasoline Light Duty Vehicle to Account for the SAFE Vehicle Rule Applied

2.2 Overall Operational

Unmitigated Operational

	ROG	NOx	CO	SO2	Fugitive PM10	Exhaust PM10	PM10 Total	Fugitive PM2.5	Exhaust PM2.5	PM2.5 Total	Bio- CO2	NBio- CO2	Total CO2	CH4	N2O	CO2e
Category	lb/day										lb/day					
Area	6.2329	0.1967	17.0786	9.0000e-004		0.0947	0.0947		0.0947	0.0947	0.0000	30.7870	30.7870	0.0295	0.0000	31.5255
Energy	0.0557	0.4762	0.2054	3.0400e-003		0.0385	0.0385		0.0385	0.0385		607.3362	607.3362	0.0116	0.0111	610.9453
Mobile	2.9764	3.4326	29.0736	0.0553	6.3826	0.0415	6.4241	1.7000	0.0387	1.7386		5,770.3864	5,770.3864	0.4092	0.2925	5,867.7791
Total	**9.2649**	**4.1054**	**46.3577**	**0.0593**	**6.3826**	**0.1747**	**6.5573**	**1.7000**	**0.1719**	**1.8718**	**0.0000**	**6,408.5096**	**6,408.5096**	**0.4504**	**0.3036**	**6,510.2499**

Mitigated Operational

	ROG	NOx	CO	SO2	Fugitive PM10	Exhaust PM10	PM10 Total	Fugitive PM2.5	Exhaust PM2.5	PM2.5 Total	Bio- CO2	NBio- CO2	Total CO2	CH4	N2O	CO2e
Category	lb/day										lb/day					
Area	6.2329	0.1967	17.0786	9.0000e-004		0.0947	0.0947		0.0947	0.0947	0.0000	30.7870	30.7870	0.0295	0.0000	31.5255
Energy	0.0557	0.4762	0.2054	3.0400e-003		0.0385	0.0385		0.0385	0.0385		607.3362	607.3362	0.0116	0.0111	610.9453
Mobile	2.7321	2.9742	25.3748	0.0456	5.2178	0.0349	5.2527	1.3897	0.0325	1.4222		4,753.7938	4,753.7938	0.3678	0.2542	4,838.7427
Total	**9.0207**	**3.6470**	**42.6589**	**0.0495**	**5.2178**	**0.1681**	**5.3859**	**1.3897**	**0.1657**	**1.5554**	**0.0000**	**5,391.9170**	**5,391.9170**	**0.4090**	**0.2653**	**5,481.2135**

EMFAC Off-Model Adjustment Factors for Gasoline Light Duty Vehicle to Account for the SAFE Vehicle Rule Applied

	ROG	NOx	CO	SO2	Fugitive PM10	Exhaust PM10	PM10 Total	Fugitive PM2.5	Exhaust PM2.5	PM2.5 Total	Bio- CO2	NBio-CO2	Total CO2	CH4	N20	CO2e
Percent Reduction	**2.64**	**11.17**	**7.98**	**16.45**	**18.25**	**3.78**	**17.87**	**18.25**	**3.59**	**16.90**	**0.00**	**15.86**	**15.86**	**9.20**	**12.61**	**15.81**

3.0 Construction Detail

Construction Phase

Phase Number	Phase Name	Phase Type	Start Date	End Date	Num Days Week	Num Days	Phase Description
1	Demolition	Demolition	6/1/2022	6/15/2022	6	13	
2	Site Preparation	Site Preparation	6/16/2022	6/30/2022	6	13	
3	Grading	Grading	7/2/2022	8/1/2022	6	26	
4	Building Construction	Building Construction	8/2/2022	2/26/2025	6	806	
5	Paving	Paving	2/27/2025	3/28/2025	6	26	
6	Architectural Coating	Architectural Coating	3/29/2025	5/28/2025	6	52	

Acres of Grading (Site Preparation Phase): 6.5

Acres of Grading (Grading Phase): 26

Acres of Paving: 0

Residential Indoor: 488,400; Residential Outdoor: 162,800; Non-Residential Indoor: 8,250; Non-Residential Outdoor: 2,750; Striped Parking Area: 2,724 (Architectural Coating – sqft)

OffRoad Equipment

Phase Name	Offroad Equipment Type	Amount	Usage Hours	Horse Power	Load Factor
Demolition	Air Compressors	1		78	0.48
Demolition	Concrete/Industrial Saws	0	8.00	81	0.73
Demolition	Crushing/Proc. Equipment	1		85	0.78
Demolition	Dumpers/Tenders	1		16	0.38
Demolition	Excavators	1		158	0.38

EMFAC Off-Model Adjustment Factors for Gasoline Light Duty Vehicle to Account for the SAFE Vehicle Rule Applied

Demolition	Rubber Tired Dozers	1	8.00	247	0.40
Demolition	Skid Steer Loaders	1		65	0.37
Demolition	Tractors/Loaders/Backhoes	0	8.00	97	0.37
Site Preparation	Crushing/Proc. Equipment	1		85	0.78
Site Preparation	Dumpers/Tenders	1		16	0.38
Site Preparation	Excavators	1		158	0.38
Site Preparation	Graders	1	8.00	187	0.41
Site Preparation	Plate Compactors	1		8	0.43
Site Preparation	Rubber Tired Dozers	1		247	0.40
Site Preparation	Scrapers	0	8.00	367	0.48
Site Preparation	Skid Steer Loaders	1		65	0.37
Site Preparation	Tractors/Loaders/Backhoes	2	7.00	97	0.37
Grading	Dumpers/Tenders	1		16	0.38
Grading	Excavators	1		158	0.38
Grading	Graders	1	8.00	187	0.41
Grading	Plate Compactors	1		8	0.43
Grading	Rubber Tired Dozers	1	8.00	247	0.40
Grading	Rubber Tired Loaders	0		203	0.36
Grading	Scrapers	1		367	0.48
Grading	Skid Steer Loaders	1		65	0.37
Grading	Tractors/Loaders/Backhoes	2	7.00	97	0.37
Grading	Trenchers	1		78	0.50
Building Construction	Aerial Lifts	1		63	0.31
Building Construction	Cranes	1	8.00	231	0.29
Building Construction	Excavators	1		158	0.38
Building Construction	Forklifts	1	7.00	89	0.20
Building Construction	Generator Sets	1	8.00	84	0.74
Building Construction	Pumps	1		89	0.20
Building Construction	Rough Terrain Forklifts	1		100	0.40

EMFAC Off-Model Adjustment Factors for Gasoline Light Duty Vehicle to Account for the SAFE Vehicle Rule Applied

Building Construction	Tractors/Loaders/Backhoes	0	6.00	97	0.37
Building Construction	Welders	1	8.00	46	0.45
Paving	Cement and Mortar Mixers	1	8.00	9	0.56
Paving	Pavers	1	8.00	130	0.42
Paving	Paving Equipment	1	8.00	132	0.36
Paving	Rollers	2	8.00	80	0.38
Paving	Tractors/Loaders/Backhoes	1	8.00	97	0.37
Architectural Coating	Air Compressors	1	6.00	78	0.48

Trips and VMT

Phase Name	Offroad Equipment Count	Worker Trip Number	Vendor Trip Number	Hauling Trip Number	Worker Trip Length	Vendor Trip Length	Hauling Trip Length	Worker Vehicle Class	Vendor Vehicle Class	Hauling Vehicle Class
Demolition	6	15.00	0.00	347.00	10.80	7.30	8.00	LD_Mix	HDT_Mix	HHDT
Site Preparation	9	23.00	0.00	164.00	10.80	7.30	8.00	LD_Mix	HDT_Mix	HHDT
Grading	10	25.00	0.00	900.00	10.80	7.30	15.00	LD_Mix	HDT_Mix	HHDT
Building Construction	8	170.00	30.00	0.00	10.80	7.30	20.00	LD_Mix	HDT_Mix	HHDT
Paving	6	15.00	0.00	0.00	10.80	7.30	20.00	LD_Mix	HDT_Mix	HHDT
Architectural Coating	1	34.00	0.00	0.00	10.80	7.30	20.00	LD_Mix	HDT_Mix	HHDT

3.1 Mitigation Measures Construction

Water Exposed Area

540 San Pablo Avenue CE - Bay Area AQMD Air District, Winter

EMFAC Off-Model Adjustment Factors for Gasoline Light Duty Vehicle to Account for the SAFE Vehicle Rule Applied

3.2 Demolition - 2022

Unmitigated Construction On-Site

	ROG	NOx	CO	SO2	Fugitive PM10	Exhaust PM10	PM10 Total	Fugitive PM2.5	Exhaust PM2.5	PM2.5 Total	Bio- CO2	NBio- CO2	Total CO2	CH4	N2O	CO2e
Category	lb/day										lb/day					
Fugitive Dust					2.9250	0.0000	2.9250	0.4429	0.0000	0.4429			0.0000			0.0000
Off-Road	0.8371	8.7937	3.5820	8.5300e-003		0.4174	0.4174		0.3840	0.3840		827.0354	827.0354	0.2675		833.7224
Total	**0.8371**	**8.7937**	**3.5820**	**8.5300e-003**	**2.9250**	**0.4174**	**3.3423**	**0.4429**	**0.3840**	**0.8269**		**827.0354**	**827.0354**	**0.2675**		**833.7224**

Unmitigated Construction Off-Site

	ROG	NOx	CO	SO2	Fugitive PM10	Exhaust PM10	PM10 Total	Fugitive PM2.5	Exhaust PM2.5	PM2.5 Total	Bio- CO2	NBio- CO2	Total CO2	CH4	N2O	CO2e
Category	lb/day										lb/day					
Hauling	0.0636	2.1730	0.6125	7.1900e-003	0.1871	0.0168	0.2038	0.0513	0.0160	0.0674		782.3852	782.3852	0.0253	0.1239	819.9393
Vendor	0.0000	0.0000	0.0000	0.0000	0.0000	0.0000	0.0000	0.0000	0.0000	0.0000		0.0000	0.0000	0.0000	0.0000	0.0000
Worker	0.0446	0.0325	0.3699	1.0200e-003	0.1232	6.4000e-004	0.1239	0.0327	5.9000e-004	0.0333		104.2358	104.2358	3.4600e-003	3.2200e-003	105.2827
Total	**0.1082**	**2.2055**	**0.9824**	**8.2100e-003**	**0.3103**	**0.0174**	**0.3277**	**0.0840**	**0.0166**	**0.1006**		**886.6210**	**886.6210**	**0.0287**	**0.1271**	**925.2219**

EMFAC Off-Model Adjustment Factors for Gasoline Light Duty Vehicle to Account for the SAFE Vehicle Rule Applied

3.2 Demolition - 2022

Mitigated Construction On-Site

	ROG	NOx	CO	SO2	Fugitive PM10	Exhaust PM10	PM10 Total	Fugitive PM2.5	Exhaust PM2.5	PM2.5 Total	Bio- CO2	NBio- CO2	Total CO2	CH4	N2O	CO2e
Category	lb/day										lb/day					
Fugitive Dust					2.9250	0.0000	2.9250	0.4429	0.0000	0.4429			0.0000			0.0000
Off-Road	0.8371	8.7937	3.5820	8.5300e-003		0.4174	0.4174		0.3840	0.3840	0.0000	827.0354	827.0354	0.2675		833.7224
Total	**0.8371**	**8.7937**	**3.5820**	**8.5300e-003**	**2.9250**	**0.4174**	**3.3423**	**0.4429**	**0.3840**	**0.8269**	**0.0000**	**827.0354**	**827.0354**	**0.2675**		**833.7224**

Mitigated Construction Off-Site

	ROG	NOx	CO	SO2	Fugitive PM10	Exhaust PM10	PM10 Total	Fugitive PM2.5	Exhaust PM2.5	PM2.5 Total	Bio- CO2	NBio- CO2	Total CO2	CH4	N2O	CO2e
Category	lb/day										lb/day					
Hauling	0.0636	2.1730	0.6125	7.1900e-003	0.1871	0.0168	0.2038	0.0513	0.0160	0.0674		782.3852	782.3852	0.0253	0.1239	819.9393
Vendor	0.0000	0.0000	0.0000	0.0000	0.0000	0.0000	0.0000	0.0000	0.0000	0.0000		0.0000	0.0000	0.0000	0.0000	0.0000
Worker	0.0446	0.0325	0.3699	1.0200e-003	0.1232	6.4000e-004	0.1239	0.0327	5.9000e-004	0.0333		104.2358	104.2358	3.4600e-003	3.2200e-003	105.2827
Total	**0.1082**	**2.2055**	**0.9824**	**8.2100e-003**	**0.3103**	**0.0174**	**0.3277**	**0.0840**	**0.0166**	**0.1006**		**886.6210**	**886.6210**	**0.0287**	**0.1271**	**925.2219**

EMFAC Off-Model Adjustment Factors for Gasoline Light Duty Vehicle to Account for the SAFE Vehicle Rule Applied

3.3 Site Preparation - 2022

Unmitigated Construction On-Site

	ROG	NOx	CO	SO2	Fugitive PM10	Exhaust PM10	PM10 Total	Fugitive PM2.5	Exhaust PM2.5	PM2.5 Total	Bio- CO2	NBio- CO2	Total CO2	CH4	N2O	CO2e
Category	lb/day										lb/day					
Fugitive Dust					0.5403	0.0000	0.5403	0.0588	0.0000	0.0588			0.0000			0.0000
Off-Road	0.7032	8.1900	5.6382	0.0121		0.3249	0.3249		0.2989	0.2989		1,168.4471	1,168.4471	0.3779		1,177.8946
Total	**0.7032**	**8.1900**	**5.6382**	**0.0121**	**0.5403**	**0.3249**	**0.8652**	**0.0588**	**0.2989**	**0.3577**		**1,168.4471**	**1,168.4471**	**0.3779**		**1,177.8946**

Unmitigated Construction Off-Site

	ROG	NOx	CO	SO2	Fugitive PM10	Exhaust PM10	PM10 Total	Fugitive PM2.5	Exhaust PM2.5	PM2.5 Total	Bio- CO2	NBio- CO2	Total CO2	CH4	N2O	CO2e
Category	lb/day										lb/day					
Hauling	0.0301	1.0270	0.2895	3.4000e-003	0.0884	7.9300e-003	0.0963	0.0243	7.5800e-003	0.0318		369.7728	369.7728	0.0119	0.0586	387.5217
Vendor	0.0000	0.0000	0.0000	0.0000	0.0000	0.0000	0.0000	0.0000	0.0000	0.0000		0.0000	0.0000	0.0000	0.0000	0.0000
Worker	0.0684	0.0498	0.5671	1.5700e-003	0.1889	9.9000e-004	0.1899	0.0501	9.1000e-004	0.0510		159.8282	159.8282	5.3100e-003	4.9400e-003	161.4334
Total	**0.0984**	**1.0768**	**0.8566**	**4.9700e-003**	**0.2774**	**8.9200e-003**	**0.2863**	**0.0744**	**8.4900e-003**	**0.0829**		**529.6011**	**529.6011**	**0.0173**	**0.0635**	**548.9552**

EMFAC Off-Model Adjustment Factors for Gasoline Light Duty Vehicle to Account for the SAFE Vehicle Rule Applied

3.3 Site Preparation - 2022

Mitigated Construction On-Site

	ROG	NOx	CO	SO2	Fugitive PM10	Exhaust PM10	PM10 Total	Fugitive PM2.5	Exhaust PM2.5	PM2.5 Total	Bio- CO2	NBio- CO2	Total CO2	CH4	N2O	CO2e
Category	lb/day										lb/day					
Fugitive Dust					0.5403	0.0000	0.5403	0.0588	0.0000	0.0588			0.0000			0.0000
Off-Road	0.7032	8.1900	5.6382	0.0121		0.3249	0.3249		0.2989	0.2989	0.0000	1,168.4471	1,168.4471	0.3779		1,177.8946
Total	**0.7032**	**8.1900**	**5.6382**	**0.0121**	**0.5403**	**0.3249**	**0.8652**	**0.0588**	**0.2989**	**0.3577**	**0.0000**	**1,168.4471**	**1,168.4471**	**0.3779**		**1,177.8946**

Mitigated Construction Off-Site

	ROG	NOx	CO	SO2	Fugitive PM10	Exhaust PM10	PM10 Total	Fugitive PM2.5	Exhaust PM2.5	PM2.5 Total	Bio- CO2	NBio- CO2	Total CO2	CH4	N2O	CO2e
Category	lb/day										lb/day					
Hauling	0.0301	1.0270	0.2895	3.4000e-003	0.0884	7.9300e-003	0.0963	0.0243	7.5800e-003	0.0318		369.7728	369.7728	0.0119	0.0586	387.5217
Vendor	0.0000	0.0000	0.0000	0.0000	0.0000	0.0000	0.0000	0.0000	0.0000	0.0000		0.0000	0.0000	0.0000	0.0000	0.0000
Worker	0.0684	0.0498	0.5671	1.5700e-003	0.1889	9.9000e-004	0.1899	0.0501	9.1000e-004	0.0510		159.8282	159.8282	5.3100e-003	4.9400e-003	161.4334
Total	**0.0984**	**1.0768**	**0.8566**	**4.9700e-003**	**0.2774**	**8.9200e-003**	**0.2863**	**0.0744**	**8.4900e-003**	**0.0829**		**529.6011**	**529.6011**	**0.0173**	**0.0635**	**548.9552**

EMFAC Off-Model Adjustment Factors for Gasoline Light Duty Vehicle to Account for the SAFE Vehicle Rule Applied

3.4 Grading - 2022

Unmitigated Construction On-Site

	ROG	NOx	CO	SO2	Fugitive PM10	Exhaust PM10	PM10 Total	Fugitive PM2.5	Exhaust PM2.5	PM2.5 Total	Bio- CO2	NBio- CO2	Total CO2	CH4	N2O	CO2e
Category	lb/day										lb/day					
Fugitive Dust					7.1100	0.0000	7.1100	3.4289	0.0000	3.4289			0.0000			0.0000
Off-Road	1.5403	16.9836	9.2202	0.0206		0.7423	0.7423		0.6829	0.6829		1,995.4825	1,995.4825	0.6454		2,011.6169
Total	**1.5403**	**16.9836**	**9.2202**	**0.0206**	**7.1100**	**0.7423**	**7.8523**	**3.4289**	**0.6829**	**4.1118**		**1,995.4825**	**1,995.4825**	**0.6454**		**2,011.6169**

Unmitigated Construction Off-Site

	ROG	NOx	CO	SO2	Fugitive PM10	Exhaust PM10	PM10 Total	Fugitive PM2.5	Exhaust PM2.5	PM2.5 Total	Bio- CO2	NBio- CO2	Total CO2	CH4	N2O	CO2e
Category	lb/day										lb/day					
Hauling	0.1273	4.7113	1.0775	0.0167	0.4542	0.0403	0.4945	0.1245	0.0385	0.1631		1,818.2623	1,818.2623	0.0595	0.2880	1,905.5707
Vendor	0.0000	0.0000	0.0000	0.0000	0.0000	0.0000	0.0000	0.0000	0.0000	0.0000		0.0000	0.0000	0.0000	0.0000	0.0000
Worker	0.0743	0.0541	0.6164	1.7100e-003	0.2054	1.0700e-003	0.2064	0.0545	9.9000e-004	0.0555		173.7264	173.7264	5.7700e-003	5.3700e-003	175.4711
Total	**0.2016**	**4.7654**	**1.6939**	**0.0184**	**0.6596**	**0.0413**	**0.7009**	**0.1790**	**0.0395**	**0.2185**		**1,991.9886**	**1,991.9886**	**0.0653**	**0.2934**	**2,081.0418**

EMFAC Off-Model Adjustment Factors for Gasoline Light Duty Vehicle to Account for the SAFE Vehicle Rule Applied

3.4 Grading - 2022

Mitigated Construction On-Site

	ROG	NOx	CO	SO2	Fugitive PM10	Exhaust PM10	PM10 Total	Fugitive PM2.5	Exhaust PM2.5	PM2.5 Total	Bio- CO2	NBio- CO2	Total CO2	CH4	N2O	CO2e
Category	lb/day										lb/day					
Fugitive Dust					7.1100	0.0000	7.1100	3.4289	0.0000	3.4289			0.0000			0.0000
Off-Road	1.5403	16.9836	9.2202	0.0206		0.7423	0.7423		0.6829	0.6829	0.0000	1,995.4825	1,995.4825	0.6454		2,011.6169
Total	**1.5403**	**16.9836**	**9.2202**	**0.0206**	**7.1100**	**0.7423**	**7.8523**	**3.4289**	**0.6829**	**4.1118**	**0.0000**	**1,995.4825**	**1,995.4825**	**0.6454**		**2,011.6169**

Mitigated Construction Off-Site

	ROG	NOx	CO	SO2	Fugitive PM10	Exhaust PM10	PM10 Total	Fugitive PM2.5	Exhaust PM2.5	PM2.5 Total	Bio- CO2	NBio- CO2	Total CO2	CH4	N2O	CO2e
Category	lb/day										lb/day					
Hauling	0.1273	4.7113	1.0775	0.0167	0.4542	0.0403	0.4945	0.1245	0.0385	0.1631		1,818.2623	1,818.2623	0.0595	0.2880	1,905.5707
Vendor	0.0000	0.0000	0.0000	0.0000	0.0000	0.0000	0.0000	0.0000	0.0000	0.0000		0.0000	0.0000	0.0000	0.0000	0.0000
Worker	0.0743	0.0541	0.6164	1.7100e-003	0.2054	1.0700e-003	0.2064	0.0545	9.9000e-004	0.0555		173.7264	173.7264	5.7700e-003	5.3700e-003	175.4711
Total	**0.2016**	**4.7654**	**1.6939**	**0.0184**	**0.6596**	**0.0413**	**0.7009**	**0.1790**	**0.0395**	**0.2185**		**1,991.9886**	**1,991.9886**	**0.0653**	**0.2934**	**2,081.0418**

EMFAC Off-Model Adjustment Factors for Gasoline Light Duty Vehicle to Account for the SAFE Vehicle Rule Applied

3.5 Building Construction - 2022

Unmitigated Construction On-Site

	ROG	NOx	CO	SO2	Fugitive PM10	Exhaust PM10	PM10 Total	Fugitive PM2.5	Exhaust PM2.5	PM2.5 Total	Bio- CO2	NBio- CO2	Total CO2	CH4	N2O	CO2e
Category	lb/day										lb/day					
Off-Road	1.0791	9.4985	8.2736	0.0162		0.4457	0.4457		0.4269	0.4269		1,518.8696	1,518.8696	0.2771		1,525.7960
Total	**1.0791**	**9.4985**	**8.2736**	**0.0162**		**0.4457**	**0.4457**		**0.4269**	**0.4269**		**1,518.8696**	**1,518.8696**	**0.2771**		**1,525.7960**

Unmitigated Construction Off-Site

	ROG	NOx	CO	SO2	Fugitive PM10	Exhaust PM10	PM10 Total	Fugitive PM2.5	Exhaust PM2.5	PM2.5 Total	Bio- CO2	NBio- CO2	Total CO2	CH4	N2O	CO2e
Category	lb/day										lb/day					
Hauling	0.0000	0.0000	0.0000	0.0000	0.0000	0.0000	0.0000	0.0000	0.0000	0.0000		0.0000	0.0000	0.0000	0.0000	0.0000
Vendor	0.0640	1.7068	0.4974	6.3500e-003	0.2032	0.0173	0.2205	0.0585	0.0165	0.0750		681.2333	681.2333	0.0148	0.1011	711.7162
Worker	0.5052	0.3681	4.1918	0.0116	1.3965	7.3000e-003	1.4038	0.3704	6.7200e-003	0.3771		1,181.3392	1,181.3392	0.0393	0.0365	1,193.2036
Total	**0.5692**	**2.0748**	**4.6893**	**0.0180**	**1.5997**	**0.0246**	**1.6243**	**0.4289**	**0.0233**	**0.4522**		**1,862.5725**	**1,862.5725**	**0.0540**	**0.1376**	**1,904.9198**

540 San Pablo Avenue CE - Bay Area AQMD Air District, Winter

EMFAC Off-Model Adjustment Factors for Gasoline Light Duty Vehicle to Account for the SAFE Vehicle Rule Applied

3.5 Building Construction - 2022

Mitigated Construction On-Site

	ROG	NOx	CO	SO2	Fugitive PM10	Exhaust PM10	PM10 Total	Fugitive PM2.5	Exhaust PM2.5	PM2.5 Total	Bio- CO2	NBio- CO2	Total CO2	CH4	N2O	CO2e
Category	lb/day										lb/day					
Off-Road	1.0791	9.4985	8.2736	0.0162		0.4457	0.4457		0.4269	0.4269	0.0000	1,518.8696	1,518.8696	0.2771		1,525.7960
Total	**1.0791**	**9.4985**	**8.2736**	**0.0162**		**0.4457**	**0.4457**		**0.4269**	**0.4269**	**0.0000**	**1,518.8696**	**1,518.8696**	**0.2771**		**1,525.7960**

Mitigated Construction Off-Site

	ROG	NOx	CO	SO2	Fugitive PM10	Exhaust PM10	PM10 Total	Fugitive PM2.5	Exhaust PM2.5	PM2.5 Total	Bio- CO2	NBio- CO2	Total CO2	CH4	N2O	CO2e
Category	lb/day										lb/day					
Hauling	0.0000	0.0000	0.0000	0.0000	0.0000	0.0000	0.0000	0.0000	0.0000	0.0000		0.0000	0.0000	0.0000	0.0000	0.0000
Vendor	0.0640	1.7068	0.4974	6.3500e-003	0.2032	0.0173	0.2205	0.0585	0.0165	0.0750		681.2333	681.2333	0.0148	0.1011	711.7162
Worker	0.5052	0.3681	4.1918	0.0116	1.3965	7.3000e-003	1.4038	0.3704	6.7200e-003	0.3771		1,181.3392	1,181.3392	0.0393	0.0365	1,193.2036
Total	**0.5692**	**2.0748**	**4.6893**	**0.0180**	**1.5997**	**0.0246**	**1.6243**	**0.4289**	**0.0233**	**0.4522**		**1,862.5725**	**1,862.5725**	**0.0540**	**0.1376**	**1,904.9198**

EMFAC Off-Model Adjustment Factors for Gasoline Light Duty Vehicle to Account for the SAFE Vehicle Rule Applied

3.5 Building Construction - 2023

Unmitigated Construction On-Site

	ROG	NOx	CO	SO2	Fugitive PM10	Exhaust PM10	PM10 Total	Fugitive PM2.5	Exhaust PM2.5	PM2.5 Total	Bio- CO2	NBio- CO2	Total CO2	CH4	N2O	CO2e
Category	lb/day										lb/day					
Off-Road	1.0015	8.7914	8.1834	0.0162		0.3946	0.3946		0.3777	0.3777		1,518.8585	1,518.8585	0.2727		1,525.6752
Total	**1.0015**	**8.7914**	**8.1834**	**0.0162**		**0.3946**	**0.3946**		**0.3777**	**0.3777**		**1,518.8585**	**1,518.8585**	**0.2727**		**1,525.6752**

Unmitigated Construction Off-Site

	ROG	NOx	CO	SO2	Fugitive PM10	Exhaust PM10	PM10 Total	Fugitive PM2.5	Exhaust PM2.5	PM2.5 Total	Bio- CO2	NBio- CO2	Total CO2	CH4	N2O	CO2e
Category	lb/day										lb/day					
Hauling	0.0000	0.0000	0.0000	0.0000	0.0000	0.0000	0.0000	0.0000	0.0000	0.0000		0.0000	0.0000	0.0000	0.0000	0.0000
Vendor	0.0315	1.3616	0.4249	6.0900e-003	0.2032	7.8200e-003	0.2110	0.0585	7.4800e-003	0.0660		653.3162	653.3162	0.0133	0.0967	682.4610
Worker	0.4716	0.3259	3.8922	0.0113	1.3965	6.9300e-003	1.4034	0.3704	6.3800e-003	0.3768		1,151.2111	1,151.2111	0.0355	0.0338	1,162.1822
Total	**0.5031**	**1.6875**	**4.3172**	**0.0173**	**1.5997**	**0.0148**	**1.6144**	**0.4289**	**0.0139**	**0.4428**		**1,804.5274**	**1,804.5274**	**0.0488**	**0.1305**	**1,844.6432**

540 San Pablo Avenue CE - Bay Area AQMD Air District, Winter

EMFAC Off-Model Adjustment Factors for Gasoline Light Duty Vehicle to Account for the SAFE Vehicle Rule Applied

3.5 Building Construction - 2023

Mitigated Construction On-Site

	ROG	NOx	CO	SO2	Fugitive PM10	Exhaust PM10	PM10 Total	Fugitive PM2.5	Exhaust PM2.5	PM2.5 Total	Bio- CO2	NBio- CO2	Total CO2	CH4	N2O	CO2e
Category	lb/day										lb/day					
Off-Road	1.0015	8.7914	8.1834	0.0162		0.3946	0.3946		0.3777	0.3777	0.0000	1,518.8585	1,518.8585	0.2727		1,525.6752
Total	**1.0015**	**8.7914**	**8.1834**	**0.0162**		**0.3946**	**0.3946**		**0.3777**	**0.3777**	**0.0000**	**1,518.8585**	**1,518.8585**	**0.2727**		**1,525.6752**

Mitigated Construction Off-Site

	ROG	NOx	CO	SO2	Fugitive PM10	Exhaust PM10	PM10 Total	Fugitive PM2.5	Exhaust PM2.5	PM2.5 Total	Bio- CO2	NBio- CO2	Total CO2	CH4	N2O	CO2e
Category	lb/day										lb/day					
Hauling	0.0000	0.0000	0.0000	0.0000	0.0000	0.0000	0.0000	0.0000	0.0000	0.0000		0.0000	0.0000	0.0000	0.0000	0.0000
Vendor	0.0315	1.3616	0.4249	6.0900e-003	0.2032	7.8200e-003	0.2110	0.0585	7.4800e-003	0.0660		653.3162	653.3162	0.0133	0.0967	682.4610
Worker	0.4716	0.3259	3.8922	0.0113	1.3965	6.9300e-003	1.4034	0.3704	6.3800e-003	0.3768		1,151.2111	1,151.2111	0.0355	0.0338	1,162.1822
Total	**0.5031**	**1.6875**	**4.3172**	**0.0173**	**1.5997**	**0.0148**	**1.6144**	**0.4289**	**0.0139**	**0.4428**		**1,804.5274**	**1,804.5274**	**0.0488**	**0.1305**	**1,844.6432**

EMFAC Off-Model Adjustment Factors for Gasoline Light Duty Vehicle to Account for the SAFE Vehicle Rule Applied

3.5 Building Construction - 2024

Unmitigated Construction On-Site

	ROG	NOx	CO	SO2	Fugitive PM10	Exhaust PM10	PM10 Total	Fugitive PM2.5	Exhaust PM2.5	PM2.5 Total	Bio- CO2	NBio- CO2	Total CO2	CH4	N2O	CO2e
Category	lb/day										lb/day					
Off-Road	0.9351	8.2027	8.0992	0.0162		0.3486	0.3486		0.3334	0.3334		1,518.8466	1,518.8466	0.2690		1,525.5719
Total	**0.9351**	**8.2027**	**8.0992**	**0.0162**		**0.3486**	**0.3486**		**0.3334**	**0.3334**		**1,518.8466**	**1,518.8466**	**0.2690**		**1,525.5719**

Unmitigated Construction Off-Site

	ROG	NOx	CO	SO2	Fugitive PM10	Exhaust PM10	PM10 Total	Fugitive PM2.5	Exhaust PM2.5	PM2.5 Total	Bio- CO2	NBio- CO2	Total CO2	CH4	N2O	CO2e
Category	lb/day										lb/day					
Hauling	0.0000	0.0000	0.0000	0.0000	0.0000	0.0000	0.0000	0.0000	0.0000	0.0000		0.0000	0.0000	0.0000	0.0000	0.0000
Vendor	0.0306	1.3622	0.4161	5.9900e-003	0.2032	7.8900e-003	0.2111	0.0585	7.5400e-003	0.0660		643.1483	643.1483	0.0132	0.0952	671.8370
Worker	0.4423	0.2909	3.6405	0.0109	1.3965	6.6000e-003	1.4031	0.3704	6.0700e-003	0.3765		1,122.8284	1,122.8284	0.0322	0.0315	1,133.0289
Total	**0.4729**	**1.6531**	**4.0565**	**0.0169**	**1.5997**	**0.0145**	**1.6142**	**0.4289**	**0.0136**	**0.4425**		**1,765.9767**	**1,765.9767**	**0.0454**	**0.1267**	**1,804.8659**

EMFAC Off-Model Adjustment Factors for Gasoline Light Duty Vehicle to Account for the SAFE Vehicle Rule Applied

3.5 Building Construction - 2024

Mitigated Construction On-Site

	ROG	NOx	CO	SO2	Fugitive PM10	Exhaust PM10	PM10 Total	Fugitive PM2.5	Exhaust PM2.5	PM2.5 Total	Bio- CO2	NBio- CO2	Total CO2	CH4	N2O	CO2e
Category	lb/day										lb/day					
Off-Road	0.9351	8.2027	8.0992	0.0162		0.3486	0.3486		0.3334	0.3334	0.0000	1,518.8466	1,518.8466	0.2690		1,525.5719
Total	**0.9351**	**8.2027**	**8.0992**	**0.0162**		**0.3486**	**0.3486**		**0.3334**	**0.3334**	**0.0000**	**1,518.8466**	**1,518.8466**	**0.2690**		**1,525.5719**

Mitigated Construction Off-Site

	ROG	NOx	CO	SO2	Fugitive PM10	Exhaust PM10	PM10 Total	Fugitive PM2.5	Exhaust PM2.5	PM2.5 Total	Bio- CO2	NBio- CO2	Total CO2	CH4	N2O	CO2e
Category	lb/day										lb/day					
Hauling	0.0000	0.0000	0.0000	0.0000	0.0000	0.0000	0.0000	0.0000	0.0000	0.0000		0.0000	0.0000	0.0000	0.0000	0.0000
Vendor	0.0306	1.3622	0.4161	5.9900e-003	0.2032	7.8900e-003	0.2111	0.0585	7.5400e-003	0.0660		643.1483	643.1483	0.0132	0.0952	671.8370
Worker	0.4423	0.2909	3.6405	0.0109	1.3965	6.6000e-003	1.4031	0.3704	6.0700e-003	0.3765		1,122.8284	1,122.8284	0.0322	0.0315	1,133.0289
Total	**0.4729**	**1.6531**	**4.0565**	**0.0169**	**1.5997**	**0.0145**	**1.6142**	**0.4289**	**0.0136**	**0.4425**		**1,765.9767**	**1,765.9767**	**0.0454**	**0.1267**	**1,804.8659**

540 San Pablo Avenue CE - Bay Area AQMD Air District, Winter

EMFAC Off-Model Adjustment Factors for Gasoline Light Duty Vehicle to Account for the SAFE Vehicle Rule Applied

3.5 Building Construction - 2025

Unmitigated Construction On-Site

	ROG	NOx	CO	SO2	Fugitive PM10	Exhaust PM10	PM10 Total	Fugitive PM2.5	Exhaust PM2.5	PM2.5 Total	Bio- CO2	NBio- CO2	Total CO2	CH4	N2O	CO2e
Category	lb/day										lb/day					
Off-Road	0.8750	7.6217	8.0396	0.0162		0.3093	0.3093		0.2954	0.2954		1,518.8655	1,518.8655	0.2654		1,525.4996
Total	**0.8750**	**7.6217**	**8.0396**	**0.0162**		**0.3093**	**0.3093**		**0.2954**	**0.2954**		**1,518.8655**	**1,518.8655**	**0.2654**		**1,525.4996**

Unmitigated Construction Off-Site

	ROG	NOx	CO	SO2	Fugitive PM10	Exhaust PM10	PM10 Total	Fugitive PM2.5	Exhaust PM2.5	PM2.5 Total	Bio- CO2	NBio- CO2	Total CO2	CH4	N2O	CO2e
Category	lb/day										lb/day					
Hauling	0.0000	0.0000	0.0000	0.0000	0.0000	0.0000	0.0000	0.0000	0.0000	0.0000		0.0000	0.0000	0.0000	0.0000	0.0000
Vendor	0.0298	1.3571	0.4089	5.8800e-003	0.2032	7.8800e-003	0.2111	0.0585	7.5400e-003	0.0660		631.7205	631.7205	0.0131	0.0934	659.8904
Worker	0.4169	0.2621	3.4213	0.0105	1.3965	6.3100e-003	1.4028	0.3704	5.8100e-003	0.3762		1,096.0107	1,096.0107	0.0293	0.0296	1,105.5481
Total	**0.4466**	**1.6192**	**3.8302**	**0.0164**	**1.5997**	**0.0142**	**1.6139**	**0.4289**	**0.0134**	**0.4423**		**1,727.7312**	**1,727.7312**	**0.0424**	**0.1230**	**1,765.4385**

540 San Pablo Avenue CE - Bay Area AQMD Air District, Winter

EMFAC Off-Model Adjustment Factors for Gasoline Light Duty Vehicle to Account for the SAFE Vehicle Rule Applied

3.5 Building Construction - 2025

Mitigated Construction On-Site

	ROG	NOx	CO	SO2	Fugitive PM10	Exhaust PM10	PM10 Total	Fugitive PM2.5	Exhaust PM2.5	PM2.5 Total	Bio- CO2	NBio- CO2	Total CO2	CH4	N2O	CO2e
Category	lb/day										lb/day					
Off-Road	0.8750	7.6217	8.0396	0.0162		0.3093	0.3093		0.2954	0.2954	0.0000	1,518.8655	1,518.8655	0.2654		1,525.4996
Total	**0.8750**	**7.6217**	**8.0396**	**0.0162**		**0.3093**	**0.3093**		**0.2954**	**0.2954**	**0.0000**	**1,518.8655**	**1,518.8655**	**0.2654**		**1,525.4996**

Mitigated Construction Off-Site

	ROG	NOx	CO	SO2	Fugitive PM10	Exhaust PM10	PM10 Total	Fugitive PM2.5	Exhaust PM2.5	PM2.5 Total	Bio- CO2	NBio- CO2	Total CO2	CH4	N2O	CO2e
Category	lb/day										lb/day					
Hauling	0.0000	0.0000	0.0000	0.0000	0.0000	0.0000	0.0000	0.0000	0.0000	0.0000		0.0000	0.0000	0.0000	0.0000	0.0000
Vendor	0.0298	1.3571	0.4089	5.8800e-003	0.2032	7.8800e-003	0.2111	0.0585	7.5400e-003	0.0660		631.7205	631.7205	0.0131	0.0934	659.8904
Worker	0.4169	0.2621	3.4213	0.0105	1.3965	6.3100e-003	1.4028	0.3704	5.8100e-003	0.3762		1,096.0107	1,096.0107	0.0293	0.0296	1,105.5481
Total	**0.4466**	**1.6192**	**3.8302**	**0.0164**	**1.5997**	**0.0142**	**1.6139**	**0.4289**	**0.0134**	**0.4423**		**1,727.7312**	**1,727.7312**	**0.0424**	**0.1230**	**1,765.4385**

EMFAC Off-Model Adjustment Factors for Gasoline Light Duty Vehicle to Account for the SAFE Vehicle Rule Applied

3.6 Paving - 2025

Unmitigated Construction On-Site

	ROG	NOx	CO	SO2	Fugitive PM10	Exhaust PM10	PM10 Total	Fugitive PM2.5	Exhaust PM2.5	PM2.5 Total	Bio- CO2	NBio- CO2	Total CO2	CH4	N2O	CO2e
Category	lb/day										lb/day					
Off-Road	0.7854	7.4371	11.6737	0.0179		0.3503	0.3503		0.3234	0.3234		1,710.0067	1,710.0067	0.5420		1,723.5556
Paving	0.0000					0.0000	0.0000		0.0000	0.0000			0.0000			0.0000
Total	**0.7854**	**7.4371**	**11.6737**	**0.0179**		**0.3503**	**0.3503**		**0.3234**	**0.3234**		**1,710.0067**	**1,710.0067**	**0.5420**		**1,723.5556**

Unmitigated Construction Off-Site

	ROG	NOx	CO	SO2	Fugitive PM10	Exhaust PM10	PM10 Total	Fugitive PM2.5	Exhaust PM2.5	PM2.5 Total	Bio- CO2	NBio- CO2	Total CO2	CH4	N2O	CO2e
Category	lb/day										lb/day					
Hauling	0.0000	0.0000	0.0000	0.0000	0.0000	0.0000	0.0000	0.0000	0.0000	0.0000		0.0000	0.0000	0.0000	0.0000	0.0000
Vendor	0.0000	0.0000	0.0000	0.0000	0.0000	0.0000	0.0000	0.0000	0.0000	0.0000		0.0000	0.0000	0.0000	0.0000	0.0000
Worker	0.0368	0.0231	0.3019	9.3000e-004	0.1232	5.6000e-004	0.1238	0.0327	5.1000e-004	0.0332		96.7068	96.7068	2.5900e-003	2.6100e-003	97.5484
Total	**0.0368**	**0.0231**	**0.3019**	**9.3000e-004**	**0.1232**	**5.6000e-004**	**0.1238**	**0.0327**	**5.1000e-004**	**0.0332**		**96.7068**	**96.7068**	**2.5900e-003**	**2.6100e-003**	**97.5484**

EMFAC Off-Model Adjustment Factors for Gasoline Light Duty Vehicle to Account for the SAFE Vehicle Rule Applied

3.6 Paving - 2025

Mitigated Construction On-Site

	ROG	NOx	CO	SO2	Fugitive PM10	Exhaust PM10	PM10 Total	Fugitive PM2.5	Exhaust PM2.5	PM2.5 Total	Bio- CO2	NBio- CO2	Total CO2	CH4	N2O	CO2e
Category	lb/day										lb/day					
Off-Road	0.7854	7.4371	11.6737	0.0179		0.3503	0.3503		0.3234	0.3234	0.0000	1,710.0067	1,710.0067	0.5420		1,723.5556
Paving	0.0000					0.0000	0.0000		0.0000	0.0000			0.0000			0.0000
Total	**0.7854**	**7.4371**	**11.6737**	**0.0179**		**0.3503**	**0.3503**		**0.3234**	**0.3234**	**0.0000**	**1,710.0067**	**1,710.0067**	**0.5420**		**1,723.5556**

Mitigated Construction Off-Site

	ROG	NOx	CO	SO2	Fugitive PM10	Exhaust PM10	PM10 Total	Fugitive PM2.5	Exhaust PM2.5	PM2.5 Total	Bio- CO2	NBio- CO2	Total CO2	CH4	N2O	CO2e
Category	lb/day										lb/day					
Hauling	0.0000	0.0000	0.0000	0.0000	0.0000	0.0000	0.0000	0.0000	0.0000	0.0000		0.0000	0.0000	0.0000	0.0000	0.0000
Vendor	0.0000	0.0000	0.0000	0.0000	0.0000	0.0000	0.0000	0.0000	0.0000	0.0000		0.0000	0.0000	0.0000	0.0000	0.0000
Worker	0.0368	0.0231	0.3019	9.3000e-004	0.1232	5.6000e-004	0.1238	0.0327	5.1000e-004	0.0332		96.7068	96.7068	2.5900e-003	2.6100e-003	97.5484
Total	**0.0368**	**0.0231**	**0.3019**	**9.3000e-004**	**0.1232**	**5.6000e-004**	**0.1238**	**0.0327**	**5.1000e-004**	**0.0332**		**96.7068**	**96.7068**	**2.5900e-003**	**2.6100e-003**	**97.5484**

EMFAC Off-Model Adjustment Factors for Gasoline Light Duty Vehicle to Account for the SAFE Vehicle Rule Applied

3.7 Architectural Coating - 2025

Unmitigated Construction On-Site

	ROG	NOx	CO	SO2	Fugitive PM10	Exhaust PM10	PM10 Total	Fugitive PM2.5	Exhaust PM2.5	PM2.5 Total	Bio- CO2	NBio- CO2	Total CO2	CH4	N2O	CO2e
Category	lb/day										lb/day					
Archit. Coating	29.7553					0.0000	0.0000		0.0000	0.0000			0.0000			0.0000
Off-Road	0.1709	1.1455	1.8091	2.9700e-003		0.0515	0.0515		0.0515	0.0515		281.4481	281.4481	0.0154		281.8319
Total	**29.9261**	**1.1455**	**1.8091**	**2.9700e-003**		**0.0515**	**0.0515**		**0.0515**	**0.0515**		**281.4481**	**281.4481**	**0.0154**		**281.8319**

Unmitigated Construction Off-Site

	ROG	NOx	CO	SO2	Fugitive PM10	Exhaust PM10	PM10 Total	Fugitive PM2.5	Exhaust PM2.5	PM2.5 Total	Bio- CO2	NBio- CO2	Total CO2	CH4	N2O	CO2e
Category	lb/day										lb/day					
Hauling	0.0000	0.0000	0.0000	0.0000	0.0000	0.0000	0.0000	0.0000	0.0000	0.0000		0.0000	0.0000	0.0000	0.0000	0.0000
Vendor	0.0000	0.0000	0.0000	0.0000	0.0000	0.0000	0.0000	0.0000	0.0000	0.0000		0.0000	0.0000	0.0000	0.0000	0.0000
Worker	0.0834	0.0524	0.6843	2.1000e-003	0.2793	1.2600e-003	0.2806	0.0741	1.1600e-003	0.0753		219.2021	219.2021	5.8600e-003	5.9100e-003	221.1096
Total	**0.0834**	**0.0524**	**0.6843**	**2.1000e-003**	**0.2793**	**1.2600e-003**	**0.2806**	**0.0741**	**1.1600e-003**	**0.0753**		**219.2021**	**219.2021**	**5.8600e-003**	**5.9100e-003**	**221.1096**

EMFAC Off-Model Adjustment Factors for Gasoline Light Duty Vehicle to Account for the SAFE Vehicle Rule Applied

3.7 Architectural Coating - 2025

Mitigated Construction On-Site

	ROG	NOx	CO	SO2	Fugitive PM10	Exhaust PM10	PM10 Total	Fugitive PM2.5	Exhaust PM2.5	PM2.5 Total	Bio- CO2	NBio- CO2	Total CO2	CH4	N2O	CO2e
Category	lb/day										lb/day					
Archit. Coating	29.7553					0.0000	0.0000		0.0000	0.0000			0.0000			0.0000
Off-Road	0.1709	1.1455	1.8091	2.9700e-003		0.0515	0.0515		0.0515	0.0515	0.0000	281.4481	281.4481	0.0154		281.8319
Total	**29.9261**	**1.1455**	**1.8091**	**2.9700e-003**		**0.0515**	**0.0515**		**0.0515**	**0.0515**	**0.0000**	**281.4481**	**281.4481**	**0.0154**		**281.8319**

Mitigated Construction Off-Site

	ROG	NOx	CO	SO2	Fugitive PM10	Exhaust PM10	PM10 Total	Fugitive PM2.5	Exhaust PM2.5	PM2.5 Total	Bio- CO2	NBio- CO2	Total CO2	CH4	N2O	CO2e
Category	lb/day										lb/day					
Hauling	0.0000	0.0000	0.0000	0.0000	0.0000	0.0000	0.0000	0.0000	0.0000	0.0000		0.0000	0.0000	0.0000	0.0000	0.0000
Vendor	0.0000	0.0000	0.0000	0.0000	0.0000	0.0000	0.0000	0.0000	0.0000	0.0000		0.0000	0.0000	0.0000	0.0000	0.0000
Worker	0.0834	0.0524	0.6843	2.1000e-003	0.2793	1.2600e-003	0.2806	0.0741	1.1600e-003	0.0753		219.2021	219.2021	5.8600e-003	5.9100e-003	221.1096
Total	**0.0834**	**0.0524**	**0.6843**	**2.1000e-003**	**0.2793**	**1.2600e-003**	**0.2806**	**0.0741**	**1.1600e-003**	**0.0753**		**219.2021**	**219.2021**	**5.8600e-003**	**5.9100e-003**	**221.1096**

EMFAC Off-Model Adjustment Factors for Gasoline Light Duty Vehicle to Account for the SAFE Vehicle Rule Applied

4.0 Operational Detail - Mobile

4.1 Mitigation Measures Mobile

Increase Transit Accessibility

Integrate Below Market Rate Housing

	ROG	NOx	CO	SO2	Fugitive PM10	Exhaust PM10	PM10 Total	Fugitive PM2.5	Exhaust PM2.5	PM2.5 Total	Bio- CO2	NBio- CO2	Total CO2	CH4	N2O	CO2e
Category	lb/day										lb/day					
Mitigated	2.7321	2.9742	25.3748	0.0456	5.2178	0.0349	5.2527	1.3897	0.0325	1.4222		4,753.7938	4,753.7938	0.3678	0.2542	4,838.7427
Unmitigated	2.9764	3.4326	29.0736	0.0553	6.3826	0.0415	6.4241	1.7000	0.0387	1.7386		5,770.3864	5,770.3864	0.4092	0.2925	5,867.7791

4.2 Trip Summary Information

	Average Daily Trip Rate			Unmitigated	Mitigated
Land Use	Weekday	Saturday	Sunday	Annual VMT	Annual VMT
Apartments Mid Rise	1,077.12	972.18	809.82	2,364,906	1,933,304
Condo/Townhouse	65.88	73.26	56.52	151,504	123,854
Enclosed Parking with Elevator	0.00	0.00	0.00		
Parking Lot	0.00	0.00	0.00		
Strip Mall	243.76	231.22	112.37	343,732	281,000
Total	1,386.76	1,276.66	978.71	2,860,142	2,338,158

4.3 Trip Type Information

EMFAC Off-Model Adjustment Factors for Gasoline Light Duty Vehicle to Account for the SAFE Vehicle Rule Applied

	Miles			Trip %			Trip Purpose %		
Land Use	H-W or C-W	H-S or C-C	H-O or C-NW	H-W or C-W	H-S or C-C	H-O or C-NW	Primary	Diverted	Pass-by
Apartments Mid Rise	10.80	4.80	5.70	31.00	15.00	54.00	86	11	3
Condo/Townhouse	10.80	4.80	5.70	31.00	15.00	54.00	86	11	3
Enclosed Parking with Elevator	9.50	7.30	7.30	0.00	0.00	0.00	0	0	0
Parking Lot	9.50	7.30	7.30	0.00	0.00	0.00	0	0	0
Strip Mall	9.50	7.30	7.30	16.60	64.40	19.00	45	40	15

4.4 Fleet Mix

Land Use	LDA	LDT1	LDT2	MDV	LHD1	LHD2	MHD	HHD	OBUS	UBUS	MCY	SBUS	MH
Apartments Mid Rise	0.553839	0.058700	0.188468	0.120786	0.022796	0.005663	0.010629	0.007566	0.000983	0.000556	0.026354	0.000841	0.002820
Condo/Townhouse	0.553839	0.058700	0.188468	0.120786	0.022796	0.005663	0.010629	0.007566	0.000983	0.000556	0.026354	0.000841	0.002820
Enclosed Parking with Elevator	0.553839	0.058700	0.188468	0.120786	0.022796	0.005663	0.010629	0.007566	0.000983	0.000556	0.026354	0.000841	0.002820
Parking Lot	0.553839	0.058700	0.188468	0.120786	0.022796	0.005663	0.010629	0.007566	0.000983	0.000556	0.026354	0.000841	0.002820
Strip Mall	0.553839	0.058700	0.188468	0.120786	0.022796	0.005663	0.010629	0.007566	0.000983	0.000556	0.026354	0.000841	0.002820

5.0 Energy Detail

Historical Energy Use: N

5.1 Mitigation Measures Energy

EMFAC Off-Model Adjustment Factors for Gasoline Light Duty Vehicle to Account for the SAFE Vehicle Rule Applied

	ROG	NOx	CO	SO2	Fugitive PM10	Exhaust PM10	PM10 Total	Fugitive PM2.5	Exhaust PM2.5	PM2.5 Total	Bio- CO2	NBio- CO2	Total CO2	CH4	N2O	CO2e
Category	lb/day										lb/day					
NaturalGas Mitigated	0.0557	0.4762	0.2054	3.0400e-003		0.0385	0.0385		0.0385	0.0385		607.3362	607.3362	0.0116	0.0111	610.9453
NaturalGas Unmitigated	0.0557	0.4762	0.2054	3.0400e-003		0.0385	0.0385		0.0385	0.0385		607.3362	607.3362	0.0116	0.0111	610.9453

5.2 Energy by Land Use - NaturalGas

Unmitigated

	NaturalGas Use	ROG	NOx	CO	SO2	Fugitive PM10	Exhaust PM10	PM10 Total	Fugitive PM2.5	Exhaust PM2.5	PM2.5 Total	Bio- CO2	NBio- CO2	Total CO2	CH4	N2O	CO2e
Land Use	kBTU/yr	lb/day										lb/day					
Apartments Mid Rise	4580.04	0.0494	0.4221	0.1796	2.6900e-003		0.0341	0.0341		0.0341	0.0341		538.8287	538.8287	0.0103	9.8800e-003	542.0307
Condo/Townhouse	513.602	5.5400e-003	0.0473	0.0201	3.0000e-004		3.8300e-003	3.8300e-003		3.8300e-003	3.8300e-003		60.4237	60.4237	1.1600e-003	1.1100e-003	60.7828
Enclosed Parking with Elevator	0	0.0000	0.0000	0.0000	0.0000		0.0000	0.0000		0.0000	0.0000		0.0000	0.0000	0.0000	0.0000	0.0000
Parking Lot	0	0.0000	0.0000	0.0000	0.0000		0.0000	0.0000		0.0000	0.0000		0.0000	0.0000	0.0000	0.0000	0.0000
Strip Mall	68.7123	7.4000e-004	6.7400e-003	5.6600e-003	4.0000e-005		5.1000e-004	5.1000e-004		5.1000e-004	5.1000e-004		8.0838	8.0838	1.5000e-004	1.5000e-004	8.1318
Total		**0.0557**	**0.4762**	**0.2054**	**3.0300e-003**		**0.0385**	**0.0385**		**0.0385**	**0.0385**		**607.3362**	**607.3362**	**0.0116**	**0.0111**	**610.9453**

EMFAC Off-Model Adjustment Factors for Gasoline Light Duty Vehicle to Account for the SAFE Vehicle Rule Applied

5.2 Energy by Land Use - NaturalGas

Mitigated

	NaturalGas Use	ROG	NOx	CO	SO2	Fugitive PM10	Exhaust PM10	PM10 Total	Fugitive PM2.5	Exhaust PM2.5	PM2.5 Total	Bio- CO2	NBio- CO2	Total CO2	CH4	N2O	CO2e
Land Use	kBTU/yr	lb/day										lb/day					
Apartments Mid Rise	4.58004	0.0494	0.4221	0.1796	2.6900e-003		0.0341	0.0341		0.0341	0.0341		538.8287	538.8287	0.0103	9.8800e-003	542.0307
Condo/Townhouse	0.513602	5.5400e-003	0.0473	0.0201	3.0000e-004		3.8300e-003	3.8300e-003		3.8300e-003	3.8300e-003		60.4237	60.4237	1.1600e-003	1.1100e-003	60.7828
Enclosed Parking with Elevator	0	0.0000	0.0000	0.0000	0.0000		0.0000	0.0000		0.0000	0.0000		0.0000	0.0000	0.0000	0.0000	0.0000
Parking Lot	0	0.0000	0.0000	0.0000	0.0000		0.0000	0.0000		0.0000	0.0000		0.0000	0.0000	0.0000	0.0000	0.0000
Strip Mall	0.0687123	7.4000e-004	6.7400e-003	5.6600e-003	4.0000e-005		5.1000e-004	5.1000e-004		5.1000e-004	5.1000e-004		8.0838	8.0838	1.5000e-004	1.5000e-004	8.1318
Total		**0.0557**	**0.4762**	**0.2054**	**3.0300e-003**		**0.0385**	**0.0385**		**0.0385**	**0.0385**		**607.3362**	**607.3362**	**0.0116**	**0.0111**	**610.9453**

6.0 Area Detail

6.1 Mitigation Measures Area

540 San Pablo Avenue CE - Bay Area AQMD Air District, Winter

EMFAC Off-Model Adjustment Factors for Gasoline Light Duty Vehicle to Account for the SAFE Vehicle Rule Applied

	ROG	NOx	CO	SO2	Fugitive PM10	Exhaust PM10	PM10 Total	Fugitive PM2.5	Exhaust PM2.5	PM2.5 Total	Bio- CO2	NBio- CO2	Total CO2	CH4	N2O	CO2e
Category	lb/day										lb/day					
Mitigated	6.2329	0.1967	17.0786	9.0000e-004		0.0947	0.0947		0.0947	0.0947	0.0000	30.7870	30.7870	0.0295	0.0000	31.5255
Unmitigated	6.2329	0.1967	17.0786	9.0000e-004		0.0947	0.0947		0.0947	0.0947	0.0000	30.7870	30.7870	0.0295	0.0000	31.5255

6.2 Area by SubCategory

Unmitigated

	ROG	NOx	CO	SO2	Fugitive PM10	Exhaust PM10	PM10 Total	Fugitive PM2.5	Exhaust PM2.5	PM2.5 Total	Bio- CO2	NBio- CO2	Total CO2	CH4	N2O	CO2e
SubCategory	lb/day										lb/day					
Architectural Coating	0.4239					0.0000	0.0000		0.0000	0.0000			0.0000			0.0000
Consumer Products	5.2951					0.0000	0.0000		0.0000	0.0000			0.0000			0.0000
Hearth	0.0000	0.0000	0.0000	0.0000		0.0000	0.0000		0.0000	0.0000	0.0000	0.0000	0.0000	0.0000	0.0000	0.0000
Landscaping	0.5138	0.1967	17.0786	9.0000e-004		0.0947	0.0947		0.0947	0.0947		30.7870	30.7870	0.0295		31.5255
Total	**6.2329**	**0.1967**	**17.0786**	**9.0000e-004**		**0.0947**	**0.0947**		**0.0947**	**0.0947**	**0.0000**	**30.7870**	**30.7870**	**0.0295**	**0.0000**	**31.5255**

EMFAC Off-Model Adjustment Factors for Gasoline Light Duty Vehicle to Account for the SAFE Vehicle Rule Applied

6.2 Area by SubCategory

Mitigated

	ROG	NOx	CO	SO2	Fugitive PM10	Exhaust PM10	PM10 Total	Fugitive PM2.5	Exhaust PM2.5	PM2.5 Total	Bio- CO2	NBio- CO2	Total CO2	CH4	N2O	CO2e
SubCategory	lb/day										lb/day					
Architectural Coating	0.4239					0.0000	0.0000		0.0000	0.0000			0.0000			0.0000
Consumer Products	5.2951					0.0000	0.0000		0.0000	0.0000			0.0000			0.0000
Hearth	0.0000	0.0000	0.0000	0.0000		0.0000	0.0000		0.0000	0.0000	0.0000	0.0000	0.0000	0.0000	0.0000	0.0000
Landscaping	0.5138	0.1967	17.0786	9.0000e-004		0.0947	0.0947		0.0947	0.0947		30.7870	30.7870	0.0295		31.5255
Total	**6.2329**	**0.1967**	**17.0786**	**9.0000e-004**		**0.0947**	**0.0947**		**0.0947**	**0.0947**	**0.0000**	**30.7870**	**30.7870**	**0.0295**	**0.0000**	**31.5255**

7.0 Water Detail

7.1 Mitigation Measures Water

EMFAC Off-Model Adjustment Factors for Gasoline Light Duty Vehicle to Account for the SAFE Vehicle Rule Applied

8.0 Waste Detail

8.1 Mitigation Measures Waste

9.0 Operational Offroad

Equipment Type	Number	Hours/Day	Days/Year	Horse Power	Load Factor	Fuel Type

10.0 Stationary Equipment

Fire Pumps and Emergency Generators

Equipment Type	Number	Hours/Day	Hours/Year	Horse Power	Load Factor	Fuel Type

Boilers

Equipment Type	Number	Heat Input/Day	Heat Input/Year	Boiler Rating	Fuel Type

User Defined Equipment

Equipment Type	Number

11.0 Vegetation

Appendix C.4

Screening Health Risk Assessment Results

Stationary Source Risk & Hazards Screening Report

Area of Interest (AOI) Information

Area : 4,667,551.4 ft²

Aug 6 2021 9:11:27 Pacific Daylight Time

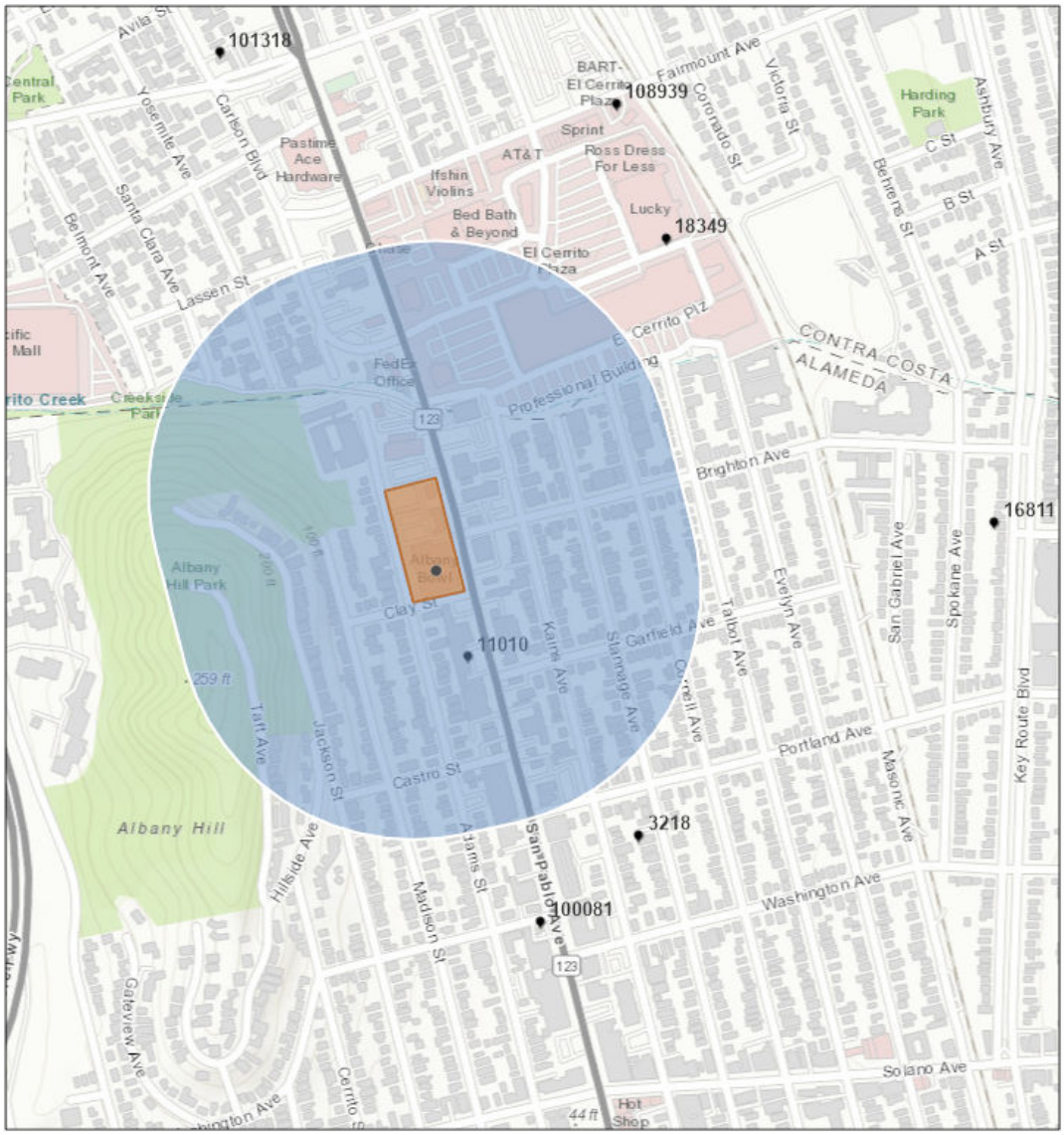

Summary

Name	Count	Area(ft²)	Length(ft)
Permitted Facilities 2018	1	N/A	N/A

Permitted Facilities 2018

#	FACID	Name	Address	City	St
1	11010	European Motor Works	618 San Pablo Ave	Albany	CA

#	Zip	County	Cancer	Hazard	PM_25	Type	Count
1	94706	Alameda	0.000	0.000	0.000	Contact BAAQMD	1

Note: The estimated risk and hazard impacts from these sources would be expected to be substantially lower when site specific Health Risk Screening Assessments are conducted.

The screening level map is not recommended for evaluating sensitive land uses such as schools, senior centers, day cares, and health facilities.

Point	MajrStCancer	MajrStPM25	HwyCancer	HwyPM25
1	0.587	0.004	17.811	0.380
2	0.592	0.004	16.790	0.357
3	0.588	0.004	16.790	0.357
4	0.588	0.004	17.171	0.367
5	0.583	0.004	17.225	0.368
6	0.583	0.004	15.570	0.330
7	0.582	0.004	15.570	0.330
8	0.582	0.004	14.346	0.302
9	0.581	0.004	14.346	0.302
10	0.581	0.004	13.859	0.290
11	0.581	0.004	13.859	0.290
12	0.587	0.004	14.002	0.293
13	0.587	0.004	14.002	0.293
14	0.587	0.004	14.075	0.295
15	0.583	0.004	13.633	0.285
16	0.583	0.004	14.075	0.295
17	0.592	0.004	14.075	0.295
18	0.592	0.004	15.136	0.318
19	0.592	0.004	15.136	0.318
20	0.592	0.004	16.790	0.357
21	0.578	0.004	17.936	0.378
22	0.577	0.004	17.294	0.364
23	0.577	0.004	17.532	0.371
24	0.590	0.004	17.517	0.372
25	0.588	0.004	16.009	0.337
26	0.588	0.004	14.560	0.305
27	0.589	0.004	14.560	0.305
28	0.592	0.004	15.044	0.315
29	0.579	0.004	15.421	0.322
30	0.578	0.004	15.421	0.322
31	0.587	0.004	13.768	0.288
32	0.589	0.004	13.977	0.292
33	0.591	0.004	13.977	0.292
34	0.591	0.004	13.977	0.292
35	0.593	0.004	14.244	0.296
36	0.593	0.004	14.244	0.296
37	0.593	0.004	14.244	0.296
38	0.580	0.004	14.396	0.298
39	0.580	0.004	14.396	0.298

Data Source: Bay Area Air Quality Management District 2019. Imagery provided by Microsoft Bing and its licensors © 2021.

Fig X Receptor Points

TAC Risk and Hazards from State Route 123 at Project Site with MERV-13 Filtration

Calculated Individual Source Risk	0.000018
PM concentration	0.380000

	Mean Time (hours per day)	*Mean Time (minutes per day)*	
Time residents are exposed to outdoor air	2.1	126	USEPA Exposure Factors Handbook
Time residents exposed to indoor air	16.4	983	USEPA Exposure Factors Handbook

Source	Proportion of 24 Hours	Filter efficiency	Adjusted Risk		Adjusted PM
Exposure to Outdoor Air	0.087	0%	1.57E-06		3.32E-02
Exposure to Indoor Air	0.683	90%	1.22E-06		2.59E-02
		Total Adjusted Individual Source Risk:	2.79E-06		5.91E-02
		Cancer Risk Per Million	**2.79**	*$PM_{2.5}$ Concentration µg/m^3*	**0.06**
	BAAQMD TAC Thresholds		*10 per million*		*0.3 µ g/m^3*
		Exceed Threshold	No		No

Time Spent Indoors

Time Spent Outdoors		Time Spent Indoors at Residence	
Age Group	**Mean (min/day)**	**Age Group**	**Mean (min/day)**
Birth to 1 year	0	Birth to 1 year	1,108
1 to 2 years	36	1 to 2 years	1,065
2 to 3 years	76	2 to 3 years	979
3 to 6 years	107	3 to 6 years	957
6 to 11 years	132	6 to 11 years	893
11 to 16 years	100	11 to 16 years	889
16 to 21 years	102	16 to 21 years	833
18 to 64 years	281	18 to 64 years	948
>64 years	298	>64 years	1,175
Average	126	Average	983
Hours Per Day	**2.1**	Hours Per Day	**16.4**

Appendix D

Cultural Resources Study